TECHNICAL INFORMATION
DanX
Swimming Pool Air Management

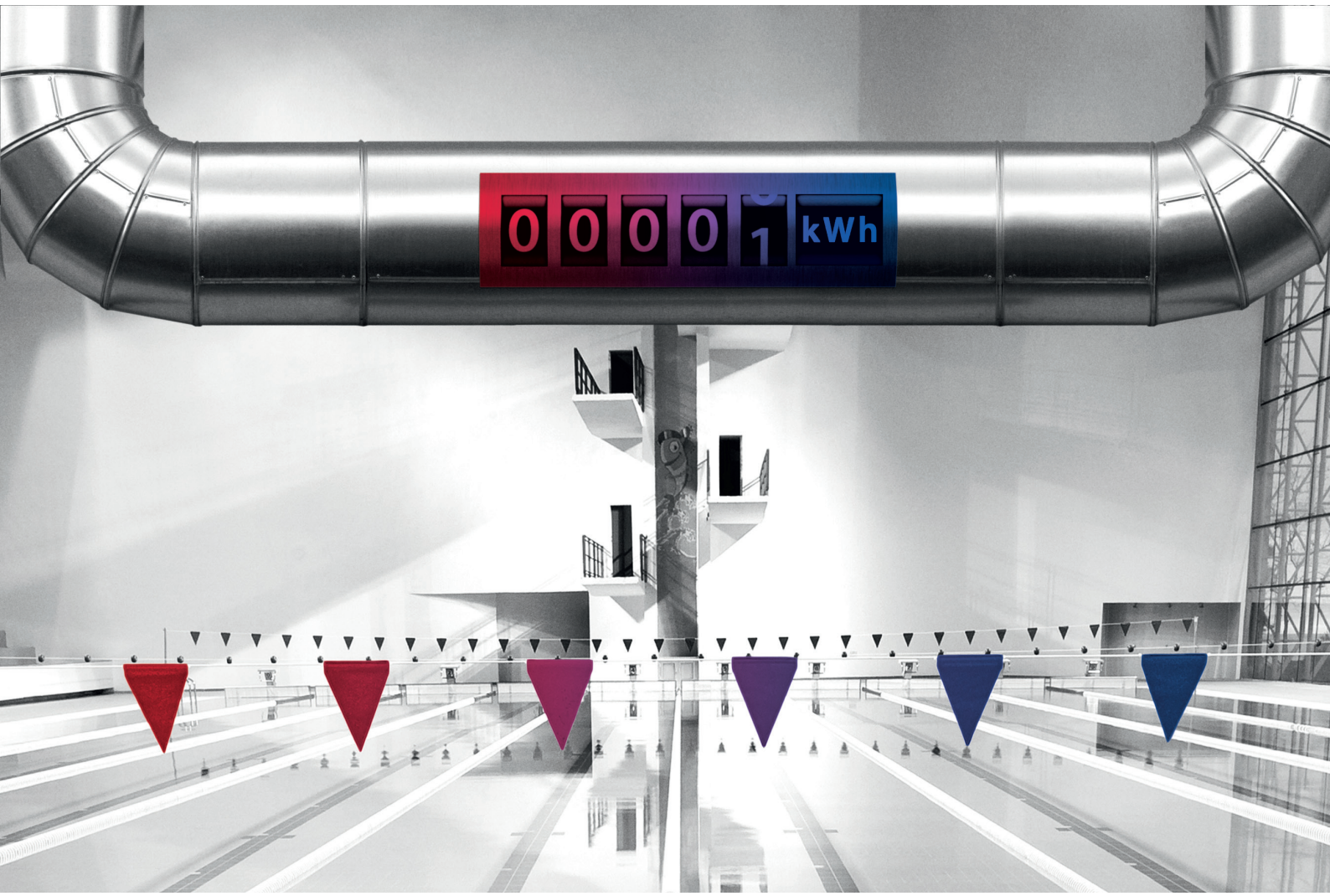

Dantherm®
CONTROL YOUR CLIMATE

Dantherm®
CONTROL YOUR CLIMATE

DanX

Swimming pool units

Ver. 2.0 - 0615

1.0 GENERAL DESCRIPTION

A controlled and comfortable indoor climate is an important factor – particularly in swimming pool halls where high relative humidity and condensation can reduce the well-being of the occupants and cause damage to the building. With Dantherm's corrosion-proof DanX unit you are guaranteed a superior solution, offering not only significant heat recovery but also the possibility of high-quality demand air management.
Dantherm Air Handling's solutions are ideal for leisure, municipal and commercial projects. Our project portfolio includes a wide variety of applications, from enormous leisure fun pools and luxurious hotel pools to spa resorts, sanatoria, sports and traditional swimming pool halls.

Concept

It is impossible to avoid water evaporation in swimming pool halls, however using a carefully designed ventilation / dehumidification solution, the relative humidity can be controlled to a comfortable level. On the basis of pool size, water temperature, air temperature, humidity and bathing activity, the DanX can be designed to accommodate any requirement. Available with a one or two stage heat recovery system and a bespoke controls package, it is the ideal device for providing energy efficient and cost-effective control of swimming pool hall environments – anywhere in the world.

Energy efficient

Maintaining a comfortable indoor environment is a priority in any swimming pool project, but what is equally important to consider is the total life cycle cost of the chosen solution. The DanX caters for life cycle costs in the broadest sense. Highly efficient heat recovery and low specific fan power, combined with an optimized control strategy, contribute to cost-efficient operation and significant energy savings, while durable components ensure reliable operation and long life. Ultimately, all of this results in economic gains in the long run and contributes to a low cost of ownership.

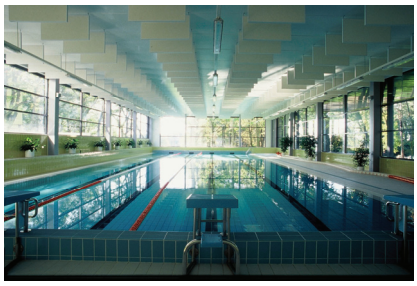

Service and support

Across the world, we have a broad net of authorized partners with a professional trained staff of technicians who are available to solve any service tasks. By sharing our know-how and experience, we make sure that you have access to the unique Dantherm Air Handling service and support.

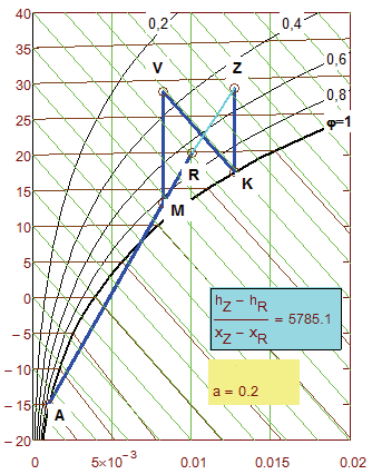

2.0 PROJECT PLANNING AND UNIT SELECTION

2.1 The humidity problem

In a swimming pool hall large quantities of water evaporate into the air of the hall. If the humidity is not kept artificially low, the relative humidity will rise to an unacceptable level, both for the construction of the building and for the comfort of the user. The building will gradually be destroyed as water vapour condenses onto cold surfaces, causing corrosion and mould attack. Poorly insulated windows will steam up when the internal air cools to a temperature below dew point. The maximum acceptable humidity will depend on the degree of insulation and the minimum outdoor temperature.

For example at 30°C/54% RH, the internal air has a dew point of 20°C, and if the outdoor temperature is -10°C the building structure must have a U-value of at least 1 W/m2K.

Air movements and especially the distribution of supply air in the swimming pool hall are of major significance, as warm dry supply air does not condense as easily as stationary air, which has had time to cool down. The supply air should therefore be blown along walls and windows at high velocity while the humid air is extracted at the opposite end of the hall. Directly over the pool surface, the air should preferably be more or less stationary, as too much air movement will affect evaporation.

In addition, the pressure in the hall should be kept slightly lower than outside to avoid water vapour being forced into the building structure. For comfort reasons, the relative humidity in the swimming pool hall should be kept under 65% RH, depending on the temperature, but equivalent to an absolute water content of 14.3 g/kg, (according to VDI 2089). Only in summertime when the absolute humidity of the outdoor air is going above 9 g/kg a higher absolute water content of 14.3 g/kg inside the swimming pool hall is acceptable.

The choice of operating conditions is very important in order to avoid humidity and minimise running costs. The higher the internal air temperature in comparison with the water temperature, the lower the evaporation. However, in practice it is not possible to maintain a difference of more than 2-3°C. Nor should the relative humidity be lower than necessary, as this will cause evaporation to increase.

In public swimming pool halls, the internal air is normally maintained at 28°C/60% - 30°C/54% RH, and the water temperature at 26-28°C. In therapy pools the water temperature is typically 4-8°C higher.

2.2 Selecting the right type of unit

For ventilating and dehumidifying swimming pool halls, Dantherm Air Handling's DanX range offers four different types of units which all are well-suited for the task.

DanX - XWPS
DanX - XWPRS
DanX - XKS
DanX - AF

The principle of the DanX – XWPS / XWPRS and XKS system differs mainly to that of the DanX - AF in the way how the return air from the swimming pool hall is dehumidified and the possibility of supplying up to 100% outdoor air for increased comfort level.

A DanX - AF system dehumidifies the return air mechanically by the means of a refrigeration system, whereas the DanX – XWPS / XWPRS and XKS dehumidifies through exchanging the wet return air with dry outdoor air. To avoid ventilation losses these systems are equipped with a heat pump system and a cross flow heat exchanger (XWPS / XWPRS) or just a cross flow heat exchanger (XKS).

One of the main benefits of the XWPS / XWPRS / XKS module is that its dehumidification capacity in the critical winter period is far higher than the capacity required because of the very dry outdoor air. This means that the relative humidity can be lowered under the calculated value if this should be necessary at very low outdoor temperatures. This is particularly advantageous for large leisure pools with special facilities such as water slides; wave pool etc. where the activity factor can differ quite a lot over the day and week. Another important advantage of the XWPS / XWPRS / XKS unit is the possible of using free cooling, something which is often necessary in many of the new modern leisure pools with their large glazed areas. Beside the possibility of free cooling the XWPRS units are also able to active cool in summertime by reversing the heat pump.

The AF unit is mainly used where dehumidification with outdoor air in summertime is not possible. This is the case when the absolute outdoor humidity for a long time of the year is above the absolute humidity of the pool hall. As the outdoor air in this situation is often not only humid but also quite warm, an external condenser is needed to avoid heating up the swimming pool hall. At the same time the evaporator then can provide active cooling to the pool hall.

2.2.1 DanX XWPS and XWPRS with heat pump

The DanX XWPS / XWPRS combine the best advantages of a heat pump and outdoor air dehumidification system. The combination of heat pump and highly efficient cross flow heat exchanger is designed to perfectly control the humidity and indoor temperature. Significant running cost reductions due to energy savings of up to 100% make this system the obvious choice in climates with low outdoor winter temperatures. The integrated mixing box ensures that only the exact quantity of outdoor air required to sustain comfortable conditions is supplied. For further energy optimization, a water-cooled condenser can be integrated into the heat pump. This allows the excess heat to be transferred to the pool or the hot water supply, where the energy is efficiently re-used.

The difference between the XWPS and XWPRS is the reversible heat pump in the XWPRS. This gives the possibility to make active cooling in summertime by reversing the cooling circuit with the help of a 4 way valve. The XWPRS unit will normally be used in countries with high but dry summer conditions, but also in therapy pools where often active cooling is needed because the high water temperatures heating up the pool hall air.

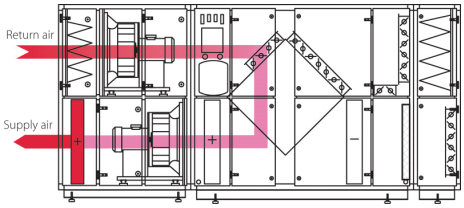

Night time recirculation XWPS/XWPRS

Night time operation heating

The DanX is running in recirculation mode without any outdoor air. The air from the pool hall is directly recirculated and heated by a hot water or electrical re-heater. The heat pump will be stopped. The fans normally will run at low speed to save energy.

.

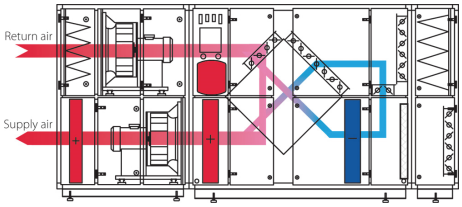

Night time dehumidification XWPS/XWPRS

Night time operation dehumidifying / heating

The DanX is running in recirculation mode without any outdoor air. The heat pump is running to dehumidify. To keep pressure drops low and get a good dehumidification capacity in the heat pump, only a part of the swimming pool air is going over the cross flow heat exchanger and is pre cooled before being dehumidified in the evaporator. The dehumidified air is then again been pre heated in the cross flow heat exchanger and then mixed with the recirculated swimming pool air, before the total air stream is been heated up in the condenser. If more heating is needed the air is heated by a hot water or electrical re-heater. The fans will run at high speed. In this operation mode the dehumidification is done just with the heat pump.

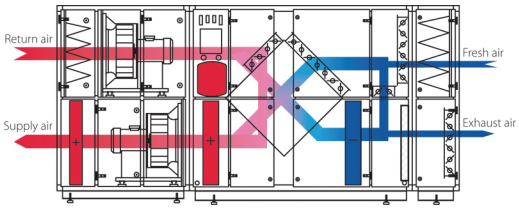

Day time winter XWPS/XWPRS

Day time operation winter

The DanX is running with the minimum outdoor air (set point) which is required for hygienic reasons for the pool hall. To keep pressure drops low and get a good dehumidification capacity in the heat pump, only a part of the wet swimming pool air is running through the heat exchanger and evaporator. Then a part of the exhaust air is leaving the unit with the other part joining the incoming outdoor air. These two airstreams are then preheated first in the cross flow heat exchanger and afterwards in the heat pumps condenser. If the supply air temperature still is not high enough a re-heater will be activated. In this operation mode the dehumidification is done with the outdoor air and heat pump. The fans will run normally at high speed. If the dehumidification capacity is not sufficient the amount of outdoor air will automatically be increased.

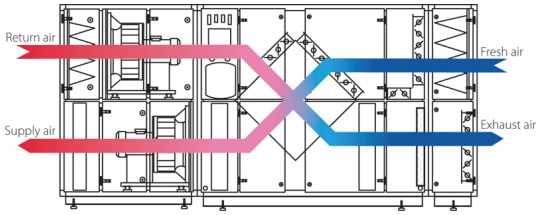

Day time summer XWPS/XWPRS

Day time operation summer

The DanX is running with 100% outdoor air. The re-heater and heat pump will normally be stopped as the temperature is high enough, after been pre heated in the cross flow heat exchanger. The fans will run normally at high speed. In this operation mode the dehumidification is done with the outdoor air.

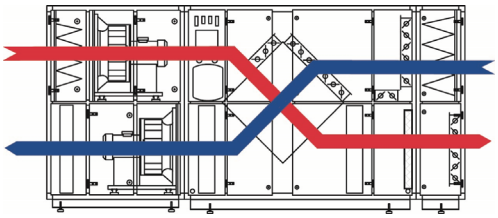

Day time summer free cooling XWPS/XWPRS

Day time operation summer free cooling

The DanX is running with 100% outdoor air. To keep the inside pool hall conditions at the wanted temperature the by-pass will open to run the unit in free cooling mode. The fans will run at high speed. In this operation mode the dehumidification is done with the outdoor air.

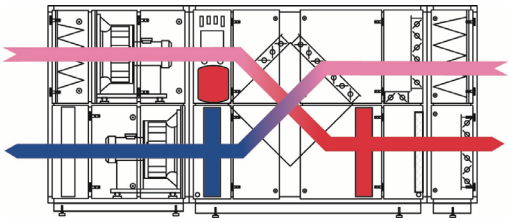

Day time summer active cooling XWPRS

Day time operation summer active cooling (only XWPRS)

The DanX is running with 100% outdoor air. The by-pass will normally be closed to pre-cool the outdoor air in the heat exchanger before the supply air is cooled in the evaporator. The fans will run at high speed. In this operation mode the dehumidification is done with the outdoor air and partly with the evaporator.

2.2.2 DanX XKS without heat pump

The DanX XKS is an air dehumidification system with high efficient cross flow heat exchanger. This system perfectly controls the humidity and indoor temperature while offering significant running cost reductions due to energy saving of up to 80%. The integrated mixing section ensures that only the exact quantity of outdoor air needed is supplied – which keeps running costs at a minimum.

In a special execution (see next page) the unit can also be used in countries where there is a high outdoor absolute humidity / temperature in summertime, where dehumidification with outdoor air is not possible.

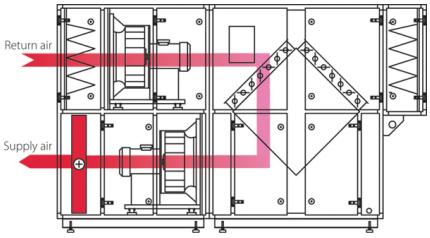

Night time recirculation XKS

Night time operation heating

The DanX is running in recirculation mode without outdoor air. The air from the pool hall is directly recirculated and heated by a hot water or electrical re-heater. The fans normally will run at low speed to save energy.

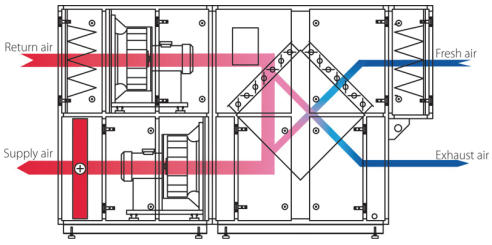

Night time dehumidification XKS

Night time operation dehumidifying / heating

The DanX is running with a small amount of outdoor air, needed to dehumidify the pool hall air. When the humidity level in the swimming pool hall again reaches the set point, the DanX is switching over to recirculation mode again. The fans normally will run at low speed to save energy.

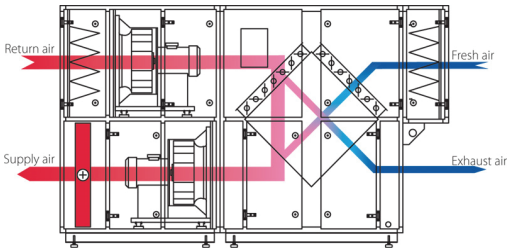

Day time winter XKS

Day time operation winter

The DanX is running with minimum outdoor air (set point) which is required for hygienic reasons for the pool hall. To keep pressure drops low, only the amount of air which should be changed with the outdoor air is going through the heat exchanger. The rest is directly recirculated and heated up by the re-heater. If the dehumidification capacity is not sufficient the amount of outdoor air will automatically be increased. The fans will run normally at high speed.

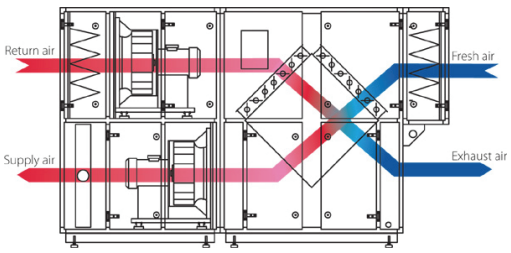

Day time summer XKS

Day time operation summer

The DanX is running with 100% outdoor air. The re-heater will normally be stopped as the temperature is high enough, after been pre heated in the cross flow heat exchanger. The fans will run normally at high speed.

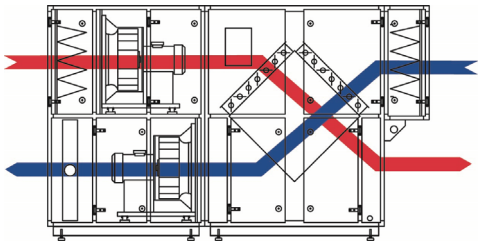
Day time summer free cooling XKS

Day time operation summer free cooling

The DanX is running with 100% outdoor air. To keep the inside pool hall conditions at the wanted temperature the by-pass will open to run the unit in free cooling mode. The fans will run at high speed.

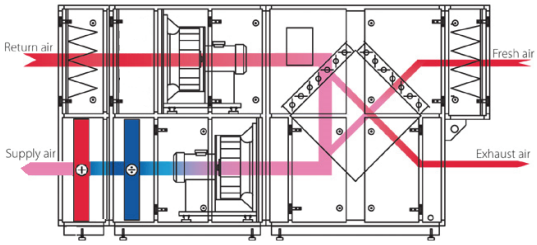

Summer operation active cooling XKS

Day time operation summer active cooling / dehumidification

This is a special execution and used in countries with high summer temperature and high humidity. In this case a cooling coil will be implemented in the unit and the heating coil moved into a separate section after the cooling coil. As long as the outdoor conditions are below the calculated absolute humidity this unit runs like a standard XKS unit.

When the outdoors absolute humidity raises, the amount of outdoor air will be automatically reduced to the minimum set point to save cooling / dehumidification energy. If in this condition cooling and /or dehumidification is needed, the built in cooling coil is started. If the supply air temperature goes below the minimum set point, the heating coil will bring up the supply temperature again.

The cooling coil in this type of unit will be specially designed, depending on the dehumidification and cooling demand.

2.2.3 DanX AF with heat pump

The DanX-AF is a very effective heat pump dehumidification system, which perfectly controls the humidity and indoor temperature while offering significant running cost reductions. This system is the obvious choice where only limited space is available, or for pools with limited use, as for instance hotel pools or in case an older ventilation plant needs replacing.

Optionally it is also possible to install the unit suspended under the ceiling of the pool room. For further energy optimization, a water-cooled condenser can be integrated into the heat pump. This allows the excess heat, to be transferred to the pool or the hot water supply, where the energy is efficiently reused.

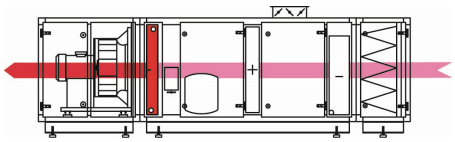

Night time recirculation AF

Night time operation heating

The DanX is running in recirculation mode without outdoor air. The air from the pool hall is directly recirculated and heated by a hot water or electrical re-heater. The fan normally will run at low speed to save energy.

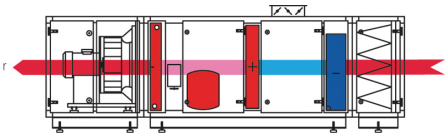

Night time dehumidification AF

Night time operation dehumidifying / heating

The DanX is running in recirculation mode without outdoor air. The heat pump is running to dehumidify. If more heating is needed the air is heated by a hot water or electrical re-heater. The fan will run at high speed.

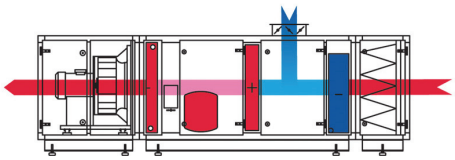

Day time operation AF

Day time operation

The DanX is mainly running as a recirculation system with up to 30% outdoor air mixed into this air stream, which is required for hygienic reasons for the pool hall. To run this system an extra extract fan is required to avoid overpressure in the swimming pool hall. The dehumidification is mainly done in the cooling circuit's evaporator, but assisted by the outdoor air entering the swimming pool through the AF system. The energy which is extracted in the evaporator is again added to the swimming pool air in the cooling circuit's condenser, just after been mixed with the outdoor air. If the humidity's set point is reached the cooling circuit will be switched off again. The fan will run at high speed.

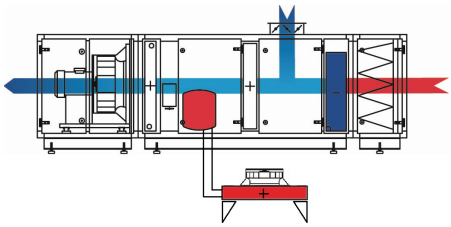

Daytime operation summer active cooling AF

Day time operation summer active cooling / dehumidification

This is a special execution and used in countries with high summer temperature and high humidity. In this case an external air cooled condenser will be connected to the cooling circuit of the AF unit. When cooling is needed the external condenser will start and replaces the internal condenser of the AF unit. In this way the evaporator inside the AF will not only dehumidify but also cool the supply air.

The external condenser for this type of unit will be specially designed, depending on the outdoor conditions.

2.3 Calculation of evaporation

The need for dehumidification arise when evaporation occur from the pool surface, the wet areas and from the swimmers themselves. Physical dimensions, temperatures, humidity and air currents are the main factors that influence the evaporation rates.

There are many different formulas for calculating the dehumidification requirement. Common to most of them is that they generate high values in relation to what is actually necessary. This is due to the fact that there is always unintentional ventilation through doors, windows and cracks or maybe that pool usage is lower than anticipated. If there is good air distribution in the hall and the water surface is somewhat lower than the surrounding tiled areas, this also reduces the need for dehumidification.

As the formula applied have a rather high safety margin, it is advisable not to make any extra allowances in the calculations to account for worst-case scenarios. This will merely result in unnecessarily high operation and investment costs. If a drastic rise in relative humidity occurs at peak periods, this will generally be short-lived until levels stabilise again at their normal level.

The German VDI 2089 and Biasin & Krumme are two standards which are most commonly used for calculating dehumidification requirements. The choice which one should be used very often depends on national preferences. After calculation of the amount of water evaporating from the pool surface the necessary DanX unit can be selected.

2.4. Selecting the DanX unit

The principle of operation of the DanX - AF system differs to that of the DanX XWPS / XWPRS / XKS and so does the equipment sizing. With an AF unit, the dehumidification of a swimming pool hall is performed by a refrigeration system, whereas with the XWPS / XWPRS / XKS unit, dehumidification is achieved mainly by exchanging wet return air with dry outdoor air, reheated by means of a heat exchanger and a heat pump.

2.4.1 Selecting a DanX XWPS / XWPRS / XKS unit

The volume of outdoor air required to deal with the evaporation rate can be calculated as follows:

$$V = W (X_i - X_u) \times 1.175$$

W = Water evaporation from pool (g/h)

X_u = absolute moisture content, outdoor air (g/kg)

X_i = absolute moisture content, return air (g/kg)

1.175 = air density (kg/m^3)

The absolute moisture content of the outdoor air (X_u) varies with the season from a maximum of 11-12 g/kg in the summer to 2-3 g/kg in the winter. In practice X_u can be set at 9,0 g/kg in Europe, a figure which will only be exceeded for approx 20% of the year in summertime. There are in any case no condensation problems in summer and the water content of the return air X_i can if necessary be permitted to go a little higher.

Beside the calculation of the air volume needed for dehumidification it is also important to check that the air change inside the swimming pool hall is sufficient. As a rule of thumbs an air flow of 3-5 times the volume of the swimming pool hall will be sufficient.

The selection chart below shows the air flow rates for the DanX XWPS / XWPRS and XKS units. The blue shaded areas represent a coil face velocity under 1,5 m/s, green a velocity under 2,5 m/s, yellow a velocity under 3,5 m/s and the red shaded areas a velocity above 3,5 m/s up to the maximum. It is recommended to design the air volume for swimming pool units in the green and yellow area.

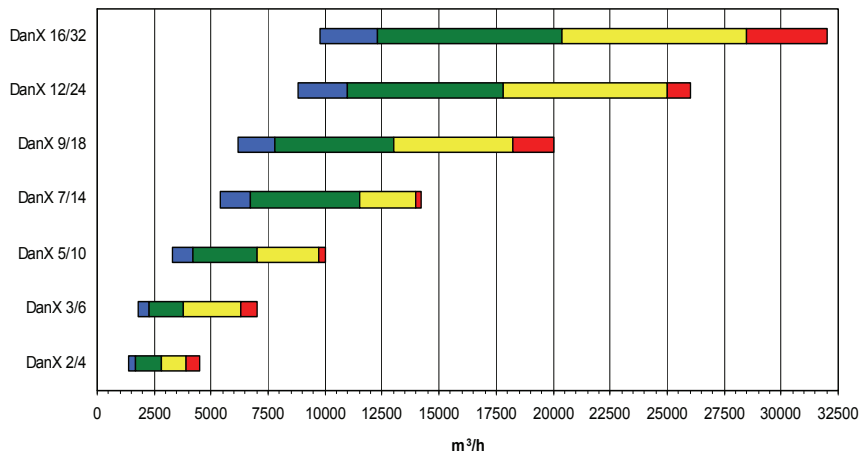

2.4.2 Selecting a DanX AF unit

Under VDI 2089, a swimming pool hall should be supplied with minimum 10 – 30% outdoor air in comparison to the total air volume of the ventilation unit. As a rule of thumbs 10 m^3/h of outdoor air per m^2 pool surface can be used for determination the amount of outdoor air to calculate with. The outdoor airs dehumidification capacity is calculated as follows:

W_o = A x 10 x 1.175 x (Xi – Xu)

A = Pool surface (m2)

10 = Outdoor air volume m^3/h

1.175 = Air density (kg/m^3)

X_u = absolute humidity, outdoor air (g/kg)

X_i = absolute humidity, return air (g/kg)

This dehumidification capacity from the above calculation has to be subtracted from the evaporation figure calculated for the swimming pool to get the DanX AF dehumidifiers dehumidification capacity:

$W_d = W - W_o$

W = Water evaporation from pool (g/h)

W_o = Dehumidification with outdoor air (g/kg)

In Chapter 3 Technical Data under the description of the AF module, you can find the dehumidification capacities for the different DanX AF units at different temperatures and humidity's.

2.5 Selection program

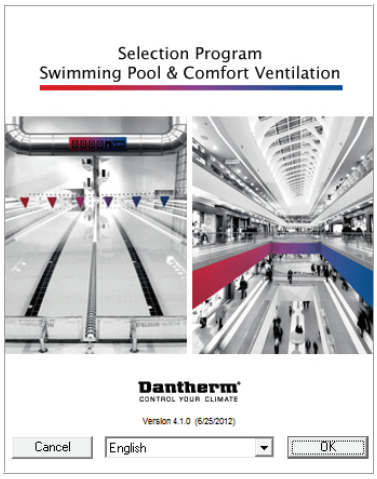

For a quick selection you can always use the general technical data from chapter 3 of this catalogue. For a more deep calculation you should always use our selection program. Here we can perform an accurate selection of a unit and obtain exact technical data and drawings of the unit.

3.0 GENERAL TECHNICAL DATA

3.1 Casing design and materials

The DanX cabinet is primarily designed for swimming pool environment and consists of a load bearing frame construction with sandwich panels.

The strong hot dip galvanised 1,25 mm closed framework is fixed with aluminium corners and is internally insulated with mineral wool. Cover panels are 50 mm double skinned and built from hot dip galvanized 0,9 mm sheet material and insulated with mineral wool. Inspection covers are in form of doors with strong hinges and tongue locks with handles or square keys. Internal partition panels are 30 mm thick and built from hot dip galvanised 1,25 mm sheet material insulated with mineral wool. In this execution the DanX unit fulfils corrosion class C2 according to EN/ISO 12944-2.

For extra protection and to fulfil corrosion class C4 according to EN/ISO 12944-2 Dantherm offers an internal powder coated finish, where every part is painted separately before assembly. If the unit is installed outdoor in an aggressive environment like near the coastline, a powder paint finish on the outside panels is available too. The powder coat finish on the inside or outside has a thickness of 70 µm.

The framework sections and cover panels are designed to achieve good air tightness and a smooth surface, thus to make cleaning easy together with a low heat and sound transmission, and avoiding cold spots which is essential for swimming pool units. The doors can be opened 180°, which ensures easy access for inspection and service.

The casing is designed in accordance with EN 1886 and fulfils the following classes:

Test criteria	Class
Mechanical strength	D1
Air leakage at negative pressure	L2
Air leakage at positiv pressure	L2
Filter bypass leakage	F8
Thermal transmittance	T3
Thermal bridging	TB3

3.2.1 Overall dimensions DanX – XWPS

The smaller DanX XWPS 2/4 – 9/18 units are built up from three separate modules. The first module contains the two plug fans, return air filter and heating coil, the second the complete heat pump, cross flow heat exchanger and mixing box and the third one the outdoor air filter and exhaust air damper. In the larger DanX XWPS 12/24 – 16/32 the fan/filter/heater module is split up in three separate modules, two fan modules and one filter/heater module.

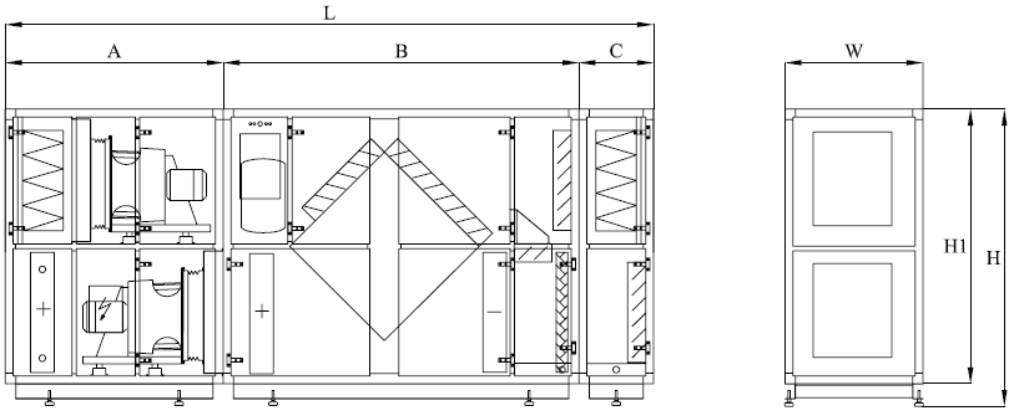

DanX - XWPS	A mm	B mm	C mm	L mm	W mm	H mm	H1 mm	Weight kg
2/4	1285	1905	475	3665	880	1600	1400	1150
3/6	1390	2270	475	4135	880	1960	1760	1300
5/10	1390	2270	475	4135	1400	1960	1760	1800
7/14	1530	2270	475	4275	1900	2120	1920	2300
9/18	1685	2500	475	4660	1800	2550	2350	2700

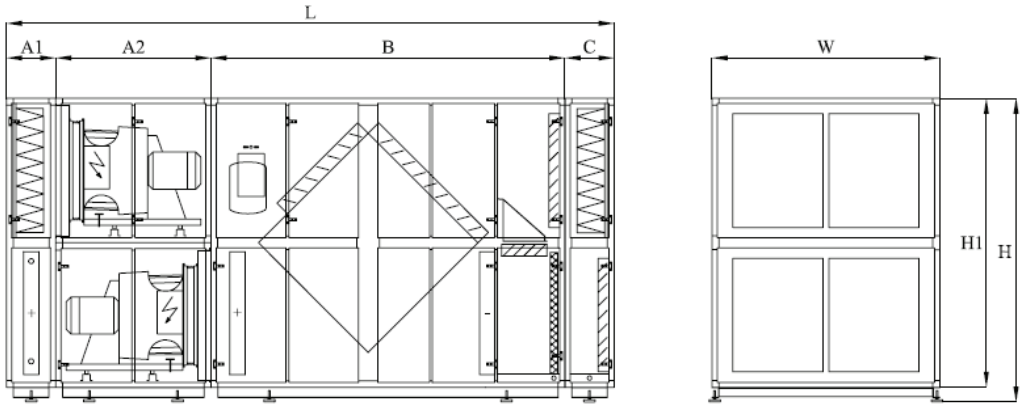

DanX - XWPS	A1 mm	A2 mm	B mm	C mm	L mm	W mm	H mm	H1 mm	Weight kg
12/24	475	1400	2600	475	4950	2200	2760	2550	3650
16/32	475	1500	3418	475	5868	2200	3010	2800	4600

3.2.2 DanX - XWPS technical data and capacities

XWPS		2/4	3/6	5/10	7/14
Air volume nominal [1]	m^3/h	3350	4500	8400	12500
Ext. duct pressure [1]	Pa	300	300	300	300
Outdoor air volume	%	0–100	0–100	0–100	0-100
Supply air filter		F7	F7	F7	F7
Return air filter		M5	M5	M5	M5
Unoccupied mode, according VDI 2089 [2]	kg/h	9	15	23	29
Occupied mode, according VDI 2089 [2]	kg/h	22	29	54	81
Occupied mode, partly outdoor air [3]	kg/h	18	26	45	64
Heat output heat exchanger / heat pump [3]	kW	20.4	31.6	52.7	72.6
Heating capacity (Difference return/supply air temp.)	kW	7.0	11.6	16.2	19.3
Compressor COP [3]		5.3	5.9	6.2	5.9
Heat output heat exchanger / heat pump [4]	kW	17.3	26.3	42.3	56.6
Heating capacity (Difference return/supply air temp.)	kW	8.3	13.5	20.1	25.5
Supply air fan [5]	kW	1.1	1.4	2.7	4.2
Exhaust air fan [5]	kW	1.0	1.3	2.6	3.9
Compressor power consumption [3]	kW	2.4	3.6	4.9	6.8
Total power consumption [3]	kW	4.2	6.0	9.6	13.5
SFP [3]	kJ/m^3	2.2	2.2	2.2	2.1
Full load current max 3x400V	A	19	19	30	42.8
Heating coil [6]	RR	2	2	2	2
Heat output max	kW	10.8	17.3	32.9	50.5
Coil off temperature max	°C	41.2	42.3	42.7	43.3
Water flow	l/s	0.18	0.24	0.44	0.71
Pressure drop waterside	kPa	2.2	3.4	3.5	4.1
Coil connections	“	¾	¾	1	1 ¼
Heat output water cooled condenser [7]	kW	8	13	19	29
Water flow max	l/h	800	1250	1900	2750
Pressure drop waterside (max flow)	kPa	28	32	38	40
Coil connections	“	¾	¾	¾	¾

[1] Higher air volumes and external pressures possible
[2] Pool hall condition at 30°C/54%r.h
[3] Pool hall condition at 30°C/54%r.h. with 30% outdoor air @ 5°C/85%r.h.
[4] Pool hall condition at 30°C/54%r.h, unoccupied mode, according VDI 2089
[5] 100% air exchange
[6] Air inlet temperature 30°C, water temperature 70°/50°C
[7] Water temperature 30°C / HP: 40°C

3.2.2 DanX - XWPS technical data and capacities

XWPS		9/18	12/24	16/32
Air volume nominal [1]	m^3/h	15500	21500	25500
Ext. duct pressure [1]	Pa	300	300	300
Outdoor air volume	%	0–100	0–100	0-100
Supply air filter		F7	F7	F7
Return air filter		M5	M5	M5
Unoccupied mode, according VDI 2089 [2]	kg/h	40	61	70
Occupied mode, according VDI 2089 [2]	kg/h	100	139	165
Occupied mode, partly outdoor air [3]	kg/h	81	115	136
Heat output heat exchanger / heat pump [3]	kW	92.6	139.3	163.2
Heating capacity (Difference return/supply air temp.)	kW	26.1	46.1	53.7
Compressor COP [3]		5.9	5.2	5.2
Heat output heat exchanger / heat pump [4]	kW	75.0	115.1	134.6
Heating capacity (Difference return/supply air temp.)	kW	34.8	57.5	67.3
Supply air fan [5]	kW	5.2	8.3	9.7
Exhaust air fan [5]	kW	5.0	8.0	9.4
Compressor power consumption [3]	kW	8.9	15.7	18.5
Total power consumption [3]	kW	17.3	29.3	34.2
SFP [3]	kJ/m^3	2.1	2.4	2.4
Full load current max 3x400V	A	58	78	94.4
Heating coil [6]	RR	2	2	2
Heat output max	kW	60.5	77.5	91.2
Coil off temperature max	°C	42.6	40.8	40.7
Water flow	l/s	0.82	1.14	1.35
Pressure drop waterside	kPa	4.5	4.2	3.8
Coil connections	“	2	2	2
Heat output water cooled condenser [7]	kW	29	46	46
Water flow max.	l/h	2750	5300	5300
Pressure drop waterside (max flow)	kPa	40	33	33
Coil connections	“	¾	1	1

[1] Higher air volumes and external pressures possible
[2] Pool hall condition at 30°C/54%r.h
[3] Pool hall condition at 30°C/54%r.h. with 30% outdoor air @ 5°C/85%r.h.
[4] Pool hall condition at 30°C/54%r.h, unoccupied mode, according VDI 2089
[5] 100% air exchange
[6] Air inlet temperature 30°C, water temperature 70°/50°C
[7] Water temperature 30°C / HP: 40°C

3.3.1 Overall dimensions DanX - XWPRS

The smaller DanX XWPRS 2/4 – 9/18 units are built up from four separate modules. The first module contains the two plug fans, return air filter and heating coil, the second the complete heat pump, cross flow heat exchanger, the third the mixing box and the fours one the outdoor air filter. In the larger DanX XWPRS 12/24 – 16/32 the fan/filter/heater module is split up in three separate modules, two fan modules and one filter/heater module.

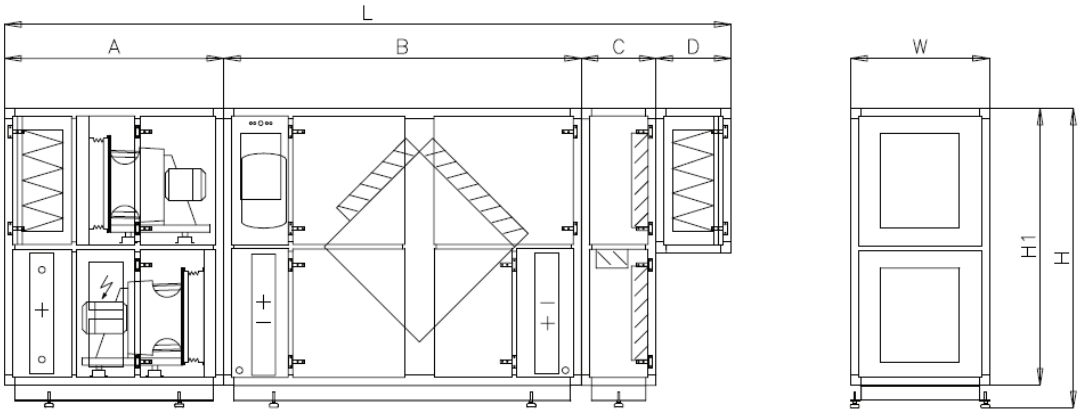

DanX – XWPRS	A mm	B mm	C mm	D mm	L mm	W mm	H mm	H1 mm	Weight kg
2/4	1285	2270	475	475	4140	880	1600	1400	1215
3/6	1390	2270	475	475	4610	880	1960	1760	1420
5/10	1390	2270	475	475	4610	1400	1960	1760	1925
7/14	1530	2270	475	475	4750	1900	2120	1920	2600
9/18	1685	2500	600	475	5260	1800	2550	2350	2910

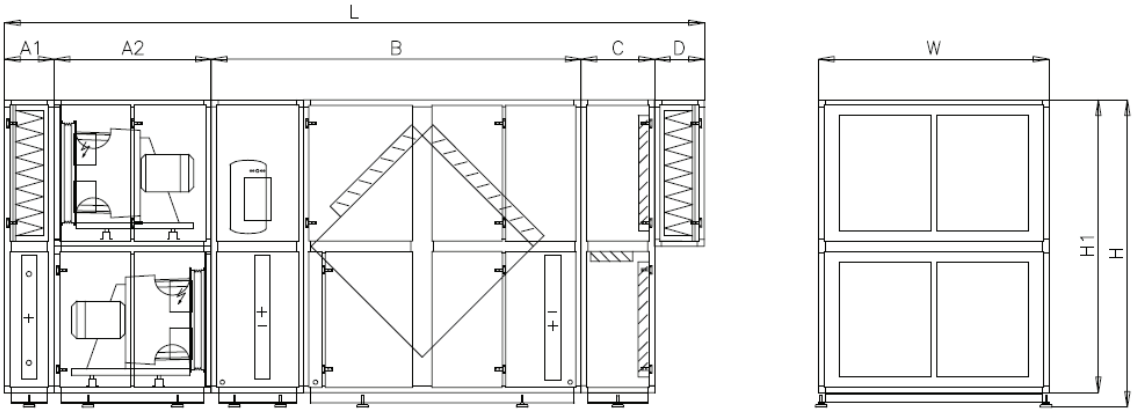

DanX - XWPRS	A1 mm	A2 mm	B mm	C mm	D mm	L mm	W mm	H mm	H1 mm	Weight kg
12/24	475	1400	2600	600	475	5550	2200	2760	2550	3990
16/32	475	1500	3530	700	475	6680	2200	3010	2800	4940

3.3.2 DanX - XWPRS technical data and capacities

XWPRS		2/4	3/6	5/10	7/14
Air volume nominal [1]	m^3/h	3350	4500	8400	12500
Ext. duct pressure [1]	Pa	300	300	300	300
Outdoor air volume	%	0–100	0–100	0–100	0-100
Supply air filter		F7	F7	F7	F7
Return air filter		M5	M5	M5	M5
Unoccupied mode, according VDI 2089 [2]	kg/h	9	15	23	29
Occupied mode, according VDI 2089 [2]	kg/h	22	29	54	81
Occupied mode, partly outdoor air [3]	kg/h	18	26	45	64
Heat output heat exchanger / heat pump [3]	kW	20.4	31.6	52.7	72.6
Heating capacity (Difference return/supply air temp.)	kW	7.0	11.6	16.2	19.3
Compressor COP [3]		5.3	5.9	6.2	5.9
Heat output heat exchanger / heat pump [4]	kW	17.3	26.3	42.3	56.6
Heating capacity (Difference return/supply air temp.)	kW	8.3	13.5	20.1	25.5
Cooling capacity [5]	kW	11.2	17.9	28.7	39.4
Supply temperature [5]	°C	21.5	19.4	21.1	21.9
Supply air fan [6]	kW	1.1	1.4	2.8	4.4
Exhaust air fan [6]	kW	1.0	1.3	2.6	3.9
Compressor power consumption [3]	kW	2.4	3.6	4.9	6.8
Total power consumption [3]	kW	4.2	6.0	9.6	13.5
SFP [3]	kJ/m^3	2.2	2.2	2.2	2.1
Full load current max 3x400V	A	19	19	30	42.8
Heating coil [7]	RR	2	2	2	2
Heat output max	kW	10.8	17.3	32.9	50.5
Coil off temperature max	°C	41.2	42.3	42.7	43.3
Water flow	l/s	0.18	0.24	0.44	0.71
Pressure drop waterside	kPa	2.2	3.4	3.5	4.1
Coil connections	“	¾	¾	1	1 ¼
Heat output water cooled condenser [8]	kW	8	13	19	29
Water flow max	l/h	800	1250	1900	2750
Pressure drop waterside (max flow)	kPa	28	32	38	40
Coil connections	“	¾	¾	¾	¾

[1] Higher air volumes and external pressures possible
[2] Pool hall condition at 30°C/54%r.h
[3] Pool hall condition at 30°C/54%r.h. with 30% outdoor air @ 5°C/85%r.h.
[4] Pool hall condition at 30°C/54%r.h, unoccupied mode, according VDI 2089
[5] Pool hall condition at 30°C/60%r.h. with 100% outdoor air @ 34°C/30%r.h.
[6] 100% air exchange
[7] Air inlet temperature 30°C, water temperature 70°/50°C
[8] Water temperature 30°C / HP: 40°C

3.3.2 DanX - XWPRS technical data and capacities

XWPRS		9/18	12/24	16/32
Air volume nominal [1]	m^3/h	15500	21500	25500
Ext. duct pressure [1]	Pa	300	300	300
Outdoor air volume	%	0–100	0–100	0-100
Supply air filter		F7	F7	F7
Return air filter		M5	M5	M5
Unoccupied mode, according VDI 2089 [2]	kg/h	40	61	70
Occupied mode, according VDI 2089 [2]	kg/h	100	139	165
Occupied mode, partly outdoor air [3]	kg/h	81	115	136
Heat output heat exchanger / heat pump [3]	kW	92.6	139.3	163.2
Heating capacity (Difference return/supply air temp.)	kW	26.1	46.1	53.7
Compressor COP [3]		5.9	5.2	5.2
Heat output heat exchanger / heat pump [4]	kW	75.0	115.1	134.6
Heating capacity (Difference return/supply air temp.)	kW	34.8	57.5	67.3
Cooling capacity [5]	kW	51.3	77.4	95.2
Supply temperature [5]	°C	21.5	20.6	20.2
Supply air fan [6]	kW	5.4	8.6	10.2
Exhaust air fan [6]	kW	5.1	8.2	9.9
Compressor power consumption [3]	kW	8.9	15.7	18.5
Total power consumption [3]	kW	17.3	29.3	34.2
SFP [3]	kJ/m^3	2.1	2.4	2.4
Full load current max 3x400V	A	58	78	94.4
Heating coil [7]	RR	2	2	2
Heat output max	kW	60.5	77.5	91.2
Coil off temperature max	°C	42.6	40.8	40.7
Water flow	l/s	0.82	1.14	1.35
Pressure drop waterside	kPa	4.5	4.2	3.8
Coil connections	“	2	2	2
Heat output water cooled condenser [8]	kW	29	46	46
Water flow max.	l/h	2750	5300	5300
Pressure drop waterside (max flow)	kPa	40	33	33
Coil connections	“	¾	1	1

[1] Higher air volumes and external pressures possible
[2] Pool hall condition at 30°C/54%r.h
[3] Pool hall condition at 30°C/54%r.h. with 30% outdoor air @ 5°C/85%r.h.
[4] Pool hall condition at 30°C/54%r.h, unoccupied mode, according VDI 2089
[5] Pool hall condition at 30°C/60%r.h. with 100% outdoor air @ 34°C/30%r.h
[6] 100% air exchange
[7] Air inlet temperature 30°C, water temperature 70°/50°C
[8] Water temperature 30°C / HP: 40°C

3.4.1 Overall dimensions DanX - XKS

The smaller DanX XKS 2/4 – 9/18 units are built up from three separate modules. The first module contains the two plug fans, return air filter and heating coil, the second the cross flow heat exchanger with internal mixing box and the third one the outdoor air filter. In the larger DanX XKS 12/24 – 16/32 the fan/filter/heater module is split up in three separate modules, two fan modules and one filter/heater module.

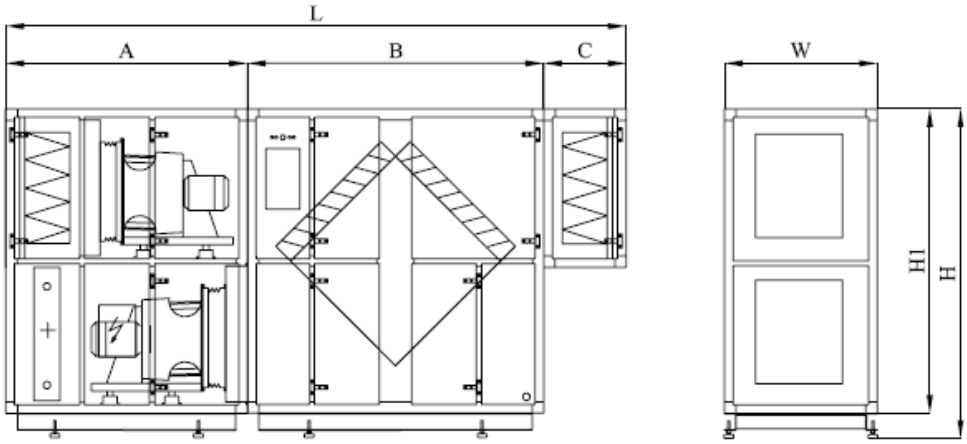

DanX - XKS	A mm	B mm	C mm	L mm	W mm	H mm	H1 mm	Weight kg
2/4	1285	1341	475	3101	880	1600	1400	850
3/6	1390	1707	475	3572	880	1960	1760	925
5/10	1390	1707	475	3572	1400	1960	1760	1300
7/14	1530	1707	475	3712	1900	2120	1920	1675
9/18	1685	1920	475	4080	1800	2550	2350	1925

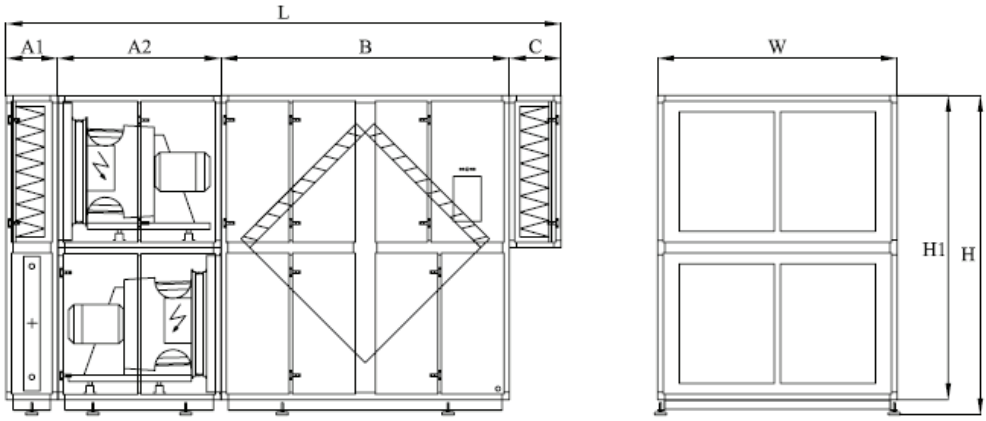

DanX - XKS	A1 mm	A2 mm	B mm	C mm	L mm	W mm	H mm	H1 mm	Weight kg
12/24	475	1400	1920	475	4270	2200	2760	2550	2550
16/32	475	1500	2650	475	5100	2200	3010	2800	3300

3.4.2 DanX – XKS technical data and capacities

XKS		2/4	3/6	5/10	7/14
Air volume nominal [1]	m^3/h	3350	4500	8400	12500
Ext. duct pressure [1]	Pa	300	300	300	300
Outdoor air volume	%	0–100	0–100	0–100	0-100
Supply air filter		F7	F7	F7	F7
Return air filter		M5	M5	M5	M5
Occupied mode, according VDI 2089 [2]	kg/h	22	29	54	81
Occupied mode, partly outdoor air [3]	kg/h	12	16	30	44
Heat output heat exchanger [3]	kW	6.2	8.3	15.3	22.3
Heat exchanger efficiency [3]	%	75	74	73	71
Heat output heat exchanger [4]	kW	10.4	13.8	25.5	37.2
Heat exchanger efficiency [4]	%	78	77	76	75
Supply air fan [5]	kW	1.0	1.3	2.6	4.0
Exhaust air fan [5]	kW	0.9	1.2	2.4	3.7
Total power consumption [3]	kW	1.5	2.0	4.1	5.9
SFP [3]	kJ/m^3	1.7	1.6	1.8	1.7
Full load current max 3x400V	A	8.8	11.8	12.4	21.8
Heating coil [6]	RR	2	2	2	2
Heat output max	kW	10.8	17.3	32.9	50.5
Coil off temperature max	°C	41.2	42.3	42.7	43.3
Water flow	l/s	0.18	0.24	0.44	0.71
Pressure drop waterside	kPa	2.2	3.4	3.5	4.1
Coil connections	“	¾	¾	1	1 ¼

[1] Higher air volume and external pressures possible
[2] Pool hall condition at 30°C/54%r.h
[3] Pool hall condition at 30°C/54%r.h. with 30% outdoor air @ 5°C/85%r.h.
[4] Pool hall condition at 30°C/54%r.h, with 30% outdoor air @ -10°C/95%r.h.
[5] 100% air exchange
[6] Air inlet temperature 30°C, water temperature 70°/50°C

3.4.2 DanX – XKS technical data and capacities

XKS		9/18	12/24	16/32
Air volume nominal [1]	m^3/h	15500	21500	25500
Ext. duct pressure [1]	Pa	300	300	300
Outdoor air volume	%	0–100	0–100	0-100
Supply air filter		F7	F7	F7
Return air filter		M5	M5	M5
Occupied mode, according VDI 2089 [2]	kg/h	100	139	165
Occupied mode, partly outdoor air [3]	kg/h	55	76	90
Heat output heat exchanger [3]	kW	25.6	34.6	42.5
Heat exchanger efficiency [3]	%	66	64	67
Heat output heat exchanger [4]	kW	46.0	63.3	74.5
Heat exchanger efficiency [4]	%	75	74	73
Supply air fan [5]	kW	5.1	8.2	8.8
Exhaust air fan [5]	kW	4.7	7.8	8.3
Total power consumption [3]	kW	7.2	11.4	12.7
SFP [3]	kJ/m^3	1.6	1.9	1.7
Full load current max 3x400V	A	29	42.0	45.4
Heating coil [6]	RR	2	2	2
Heat output max	kW	60.5	77.5	91.2
Coil off temperature max	°C	42.6	40.8	40.7
Water flow	l/s	0.82	1.14	1.35
Pressure drop waterside	kPa	4.5	4.2	3.8
Coil connections	“	2	2	2

[1] Higher air volume and external pressures possible
[2] Pool hall condition at 30°C/54%r.h
[3] Pool hall condition at 30°C/54%r.h. with 30% outdoor air @ 5°C/85%r.h.
[4] Pool hall condition at 30°C/54%r.h, with 30% outdoor air @ -10°C/95%r.h
[5] 100% air exchange
[6] Air inlet temperature 30°C, water temperature 70°/50°C

3.5.1 Overall dimensions DanX - AF with plug fans

The DanX AF units are built up from three separate modules. The first module contains the return air filter, the second the complete heat pump and heating coil and the third the plug fan.

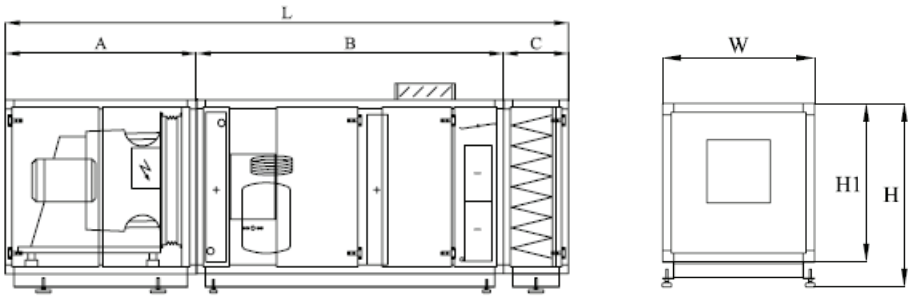

DanX - AF	A mm	B mm	C mm	L mm	W mm	H mm	H1 mm	Weight kg
3/6	985	1920	475	3380	880	1115	915	575
5/10	985	1920	475	3380	1400	1115	915	800
5/10s	985	1920	475	3380	1400	1115	915	800
7/14	1125	2250	475	3850	1900	1195	995	1125
7/14s	1125	2250	475	3850	1900	1195	995	1200
12/24	1400	2250	475	4125	2200	1485	1275	1650
12/24s	1400	2250	475	4125	2200	1485	1275	1675

3.4.2 Overall dimensions DanX - AF with centrifugal fans

The DanX AF units are built up from three separate modules. The first module contains the return air filter, the second the complete heat pump and heating coil and the third the centrifugal fan.

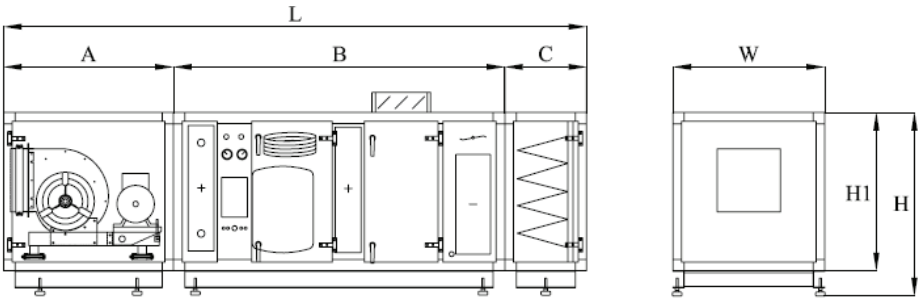

DanX - AF	A mm	B mm	C mm	L mm	W mm	H mm	H1 mm	Weight kg
3/6	985	1920	475	3380	880	1115	915	650
5/10	1200	1920	475	3595	1400	1115	915	900
5/10s	1200	1920	475	3595	1400	1115	915	900
7/14	1290	2250	475	4015	1900	1195	995	1250
7/14s	1290	2250	475	4015	1900	1195	995	1300
12/24	1400	2250	475	4125	2200	1485	1275	1750
12/24s	1400	2250	475	4125	2200	1485	1275	1800

3.5.2 DanX - AF technical data and capacities

AF		3/6	5/10	5/10s	7/14
Air volume nominal [1]	m^3/h	4850	7300	9500	12000
Ext. duct pressure [1]	Pa	300	300	300	300
Outdoor air volume	%	0–30	0–30	0–30	0-30
Return air filter		M5	M5	M5	M5
Unoccupied mode, according VDI 2089 [2]	kg/h	11	18	22	30
Occupied mode, partly outdoor air [3]	kg/h	30	47	59	76
Heat output heat pump [4]	kW	27.1	42.2	51.0	67.5
Heating capacity (Difference return/supply air temp.)	kW	11.4	17.4	21.3	28.5
Return air fan [5]	kW	1.5	2.0	3.3	4.4
Compressor power consumption [2] [5]	kW	5.0	6.9	8.8	12.5
Total power consumption [2] [5]	kW	6.5	8.9	12.1	16.9
SFP [2] [5]	kJ/m^3	1.2	1.1	1.4	1.1
Full load current max 3x400V	A	17.4	26.7	35.2	47.3
Full load current max 3x230V	A	28.9	43.2	57.2	77.6
Heating coil [6]	RR	2	2	2	2
Heat output max	kW	17.3	32.9	32.9	50.5
Coil off temperature max	°C	42.3	42.7	42.7	43.3
Water flow	l/s	0.24	0.44	0.44	0.71
Pressure drop waterside	kPa	3.4	3.5	3.5	4.1
Coil connections	“	¾	1	1	1 ¼
Heat output water cooled condenser [7]	kW	12	18	18	24
Water flow max	l/h	1250	1900	1900	2500
Pressure drop waterside (max. flow)	kPa	32	38	38	32
Coil connections	“	¾	¾	¾	¾

[1] Higher air volumes and external pressures possible
[2] Pool hall condition at 30°C/54%r.h
[3] Pool hall condition at 30°C/55%r.h. with 30% outdoor air @ 5°C/85%r.h.
[4] Pool hall condition at 30°C/54%r.h, unoccupied mode, according VDI 2089
[5] 100% return air
[6] Air inlet temperature 30°C, water temperature 70°/50°C
[7] Water temperature 30°C / HP: 40°C

3.5.2 DanX - AF technical data and capacities

AF		7/14s	12/24	12/24s
Air volume nominal [1]	m^3/h	14000	19000	24000
Ext. duct pressure [1]	Pa	300	300	300
Outdoor air volume	%	0–30	0–30	0-30
Return air filter		M5	M5	M5
Unoccupied mode, according VDI 2089 [2]	kg/h	35	48	55
Occupied mode, partly outdoor air [3]	kg/h	90	120	148
Heat output heat pump [4]	kW	80.3	105.4	130.0
Heating capacity (Difference return/supply air temp.)	kW	33.3	44.6	54.7
Return air fan [5]	kW	4.6	5.3	8.5
Compressor power consumption [2] [5]	kW	14.1	17.4	23.5
Total power consumption [2] [5]	kW	18.7	22.7	32.0
SFP [2] [5]	kJ/m^3	1.3	1.0	1.3
Full load current max 3x400V	A	55.3	65.3	93.0
Full load current max 3x230V	A	89.6	106	139
Heating coil [6]	RR	2	2	2
Heat output max	kW	50.5	77.5	77.5
Coil off temperature max	°C	43.3	40.8	40.8
Water flow	l/s	0.71	1.14	1.14
Pressure drop waterside	kPa	4.1	4.2	4.2
Coil connections	“	1 ¼	2	2
Heat output water cooled condenser [7]	kW	36	36	56
Water flow max	l/h	3800	3800	5500
Pressure drop waterside (max flow)	kPa	38	38	40
Coil connections	“	1	1	1

[1] Higher air volumes and external pressures possible
[2] Pool hall condition at 30°C/54%r.h
[3] Pool hall condition at 30°C/55%r.h. with 30% outdoor air @ 5°C/85%r.h.
[4] Pool hall condition at 30°C/54%r.h, unoccupied mode, according VDI 2089
[5] 100% return air
[6] Air inlet temperature 30°C, water temperature 70°/50°C
[7] Water temperature 30°C / HP: 40°C

3.5.3 DanX - AF dehumidification capacities

The shown capacities are for the AF unit only. If the AF is running partly with outdoor air the dehumidification capacity of the outdoor air has to be added.

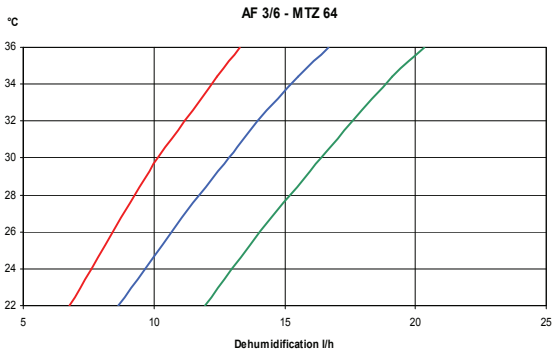

Red line = 50% r.h.
Blue line = 60% r.h.
Green line = 70% r.h.

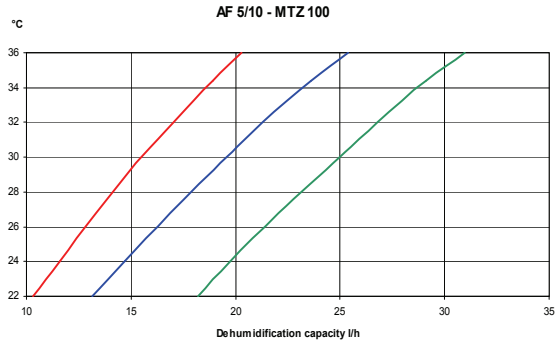

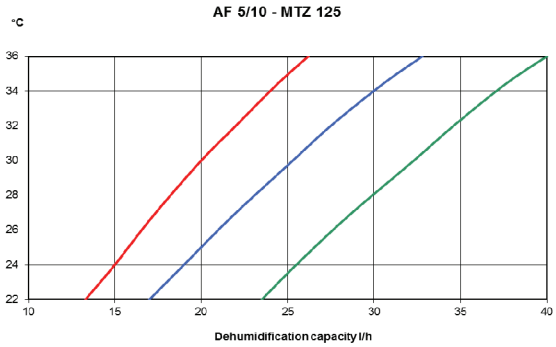

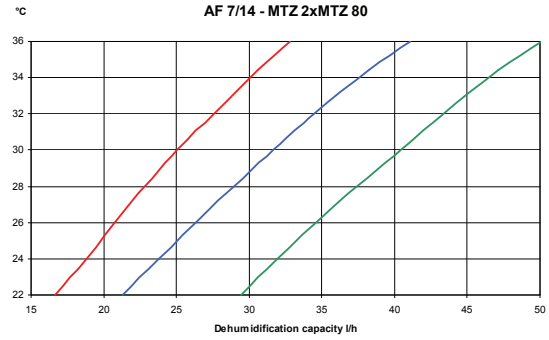

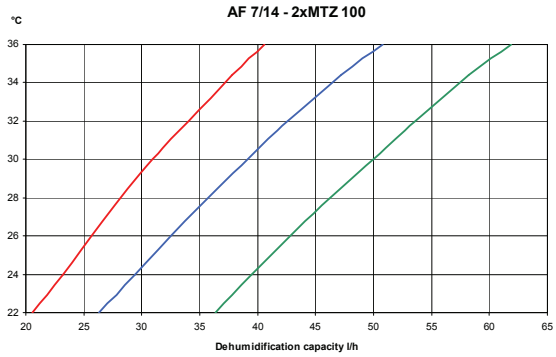

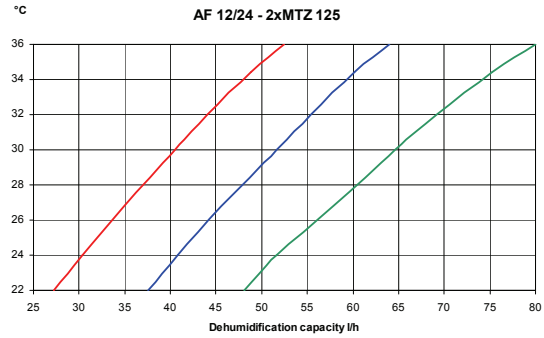

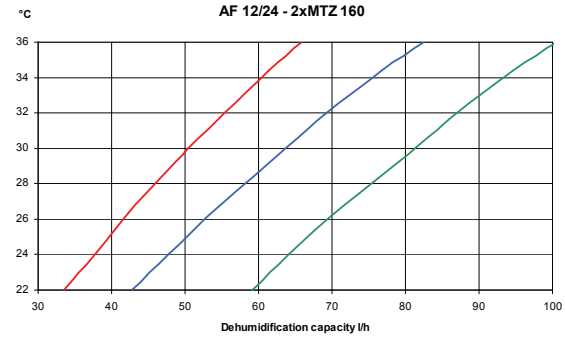

4.0 COMPONENTS

4.1.1 Modules

Each module contains different functions. These separate modules will then be assembled at the installation site to one complete unit. Depending on the size and type of DanX swimming pool unit the number of sections for one unit can be from three up to six separate modules. The assembly of the different modules is easily done with special sliding rails, which are mounted outdoor on all four sides of the module frame. For precise alignment of the installed unit adjustable feet can be used.

All electrical components in the separate modules are pre wired and can be quickly connected after the unit's assembly. The separate electric panel with the control system is connected to the unit through simple plug system which is described more exactly in chapter 5 Control System.

4.1.1.1 Accessories

The following accessories can be delivered for the modules:

- Base frame with adjustable feet
- Internal powder paint
- External powder paint
- Roof covering for outdoor installation
- Flexible duct connections

4.2.1 Fans

The DanX unit can be equipped with belt or direct driven fans, depending upon the required efficiency, the external pressure drop in the system, the controllability of the air volume and the service needs. The standard temperature range for fans and motors is -20°C to +40°C.

4.2.1.1 Direct driven Plug Fans

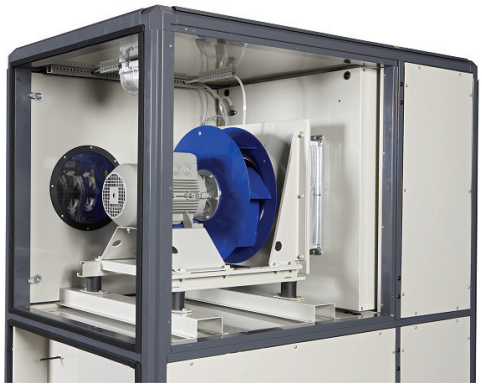

The plug fan is driven by an IE2 motor specially designed for frequency control. Using a frequency converter the plug fan will supply the exact amount of air needed for a given situation and is the obvious choice when demand management is applied and a minimum of service time should be used. As standard the fan is mounted on a frame which is fixed on rubber anti vibration mounts. All electrical part, like for example the pressure transmitters are built into the electrical panel of the fan section. The frequency converter is placed as standard on the outside panel of the fan module. Should the unit be placed outside, the frequency convertors will be delivered in a separate panel or separately for indoor mounting.

4.2.1.2 Belt driven Centrifugal Fans

All centrifugal fans are equipped with backward curved impellers, having efficiencies up to 82% depending of the size of the unit. The belt drive is designed in such a way, that the efficiency loss is not higher than 5%, with a min. bearing live of 40.000 hours. To facilitate change of fan speed the fan and motor are equipped with Taperlock pulleys. These fans will normally be supplied with 2-speed motors for swimming pool use. The advantage of the centrifugal fans is that they can supply a high pressure with a high air volume at a high efficiency. The impeller for the fans is fabricated either from glass reinforced polyamide or in powder coated steel. The fan and motor are mounted on a frame which is supported on rubber mounts for vibration isolation.

4.2.1.3 Accessories

The following accessories can be delivered for the fans:

- Anti-vibrations spring instead of rubber for better vibration isolation.
- Flow guard
- Service switch
- Inspection windows and lights

4.3.1 Cross flow heat exchanger

An essential part of the DanX XKS and XWPS/XWPRS unit is the heat exchanger from which significant energy savings are obtained since the energy in the extract air is used to preheat the fresh air before entering the room. The cross flow heat exchanger is fabricated with epoxy pre painted aluminium plates, suitable for the aggressive swimming pool environment.

There is the possibility to select between two different heat exchangers in a DanX unit, one with a low pressure drop for a good SFP value and one with a high efficiency, but with a slightly higher pressure drop. The normal efficiency of these heat exchangers in swimming pools will be between 70% and 80%.

4.3.2 Cross flow heat exchanger difference pressure

The cross flow heat exchangers can withstand a pressure difference from 1800 up to 3000 Pa, depending on the heat exchange type. It is important to realise that the pressure drop in the heat exchanger on the side under negative pressure will increase significantly when the pressure difference is high. If you have a difference pressure higher than 1000 Pa, please contact Dantherm for an exact calculation of the pressure drop on the under pressure side of the heat exchanger.

4.3.3 Accessories

The following accessories can be delivered for the cross flow heat exchanger:

- By pass damper
- Water trap
- Inspection windows and lights

4.4 Heat pump sections

4.4.1 DanX XWPS

In the DanX XWPS the heat pump will be used both for heat recovery and air dehumidification. In night time, when no outdoor air is needed in the pool hall the XWPS cooling circuit works fully as a dehumidifier, where as in day time when running with outdoor air, the cooling circuit is used as a heat pump to recover as much energy from the return air as possible.

The heat pump consists of one cooling circuit with one scroll compressor. The condenser and evaporator coil manufactured from copper tubing with pre painted aluminium fins housed within an aluminium frame and epoxy painted after assembly and therefore especially suitable for the aggressive swimming pool environment. Furthermore the cooling circuit is equipped with all necessary components like high/low pressure stats and gauges, dry filter and so on. The compressor is an energy efficient scroll compressor with R407c as refrigerant. The evaporator is equipped with a drop catcher to avoid condensed water to be carried over into the duct system.

1. Compressor
2. Evaporator
3. Condenser
4. Expansion valve
5. Receiver
6. Dry filter
7. Sight glass
8. HP / LP gauge
9. LP stat
10. HP stat
11. Safety valve
12. WCC

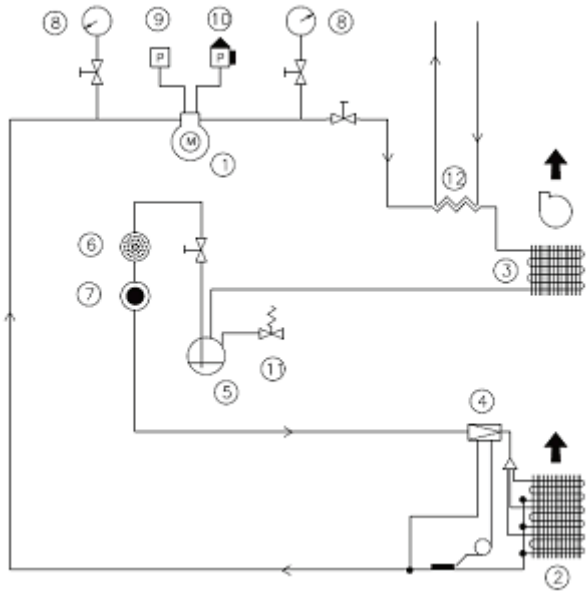

4.4.1.1 Accessories

The following accessories can be delivered for the XWPS heat pump:

- By pass damper for cross flow heat exchanger
- Water trap
- Inspection windows and lights
- Service switch compressor
- Water cooled condenser (see chapter 4.4.3)

4.4.2 DanX XWPRS

In the DanX XWPRS the heat pump is reversible and will be used both for heat recovery, air dehumidification and cooling. In night time, when no outdoor air is needed in the pool hall the XWPRS cooling circuit works fully as a dehumidifier, where as in day time when running with outdoor air, the cooling circuit is used as a heat pump to recover as much energy from the return air as possible. In summertime the supply air to the pool hall will be cooled by reversing the cooling circuit with the help of a 4 way valve.

The heat pump consists of one cooling circuit with one scroll compressor and a 4 way valve. The condenser and evaporator coil manufactured from copper tubing with pre painted aluminium fins housed within an aluminium frame and epoxy painted after assembly and therefore especially suitable for the aggressive swimming pool environment. Furthermore the cooling circuit is equipped with all necessary components like high/low pressure stats and gauges, dry filter and so on. The compressor is an energy efficient scroll compressor with R407c as refrigerant. The evaporator is equipped with a drop catcher to avoid condensed water to be carried over into the duct system.

1. Compressor
2. Evaporator
3. Condenser
4/5. Expansion valve
6. Non return valve
7. Receiver
8. Dry filter
9. Sight glass
10. 4-way valve
11. HP/LP stat
12. HP/LP gauge
13. WCC
14. Safety valve

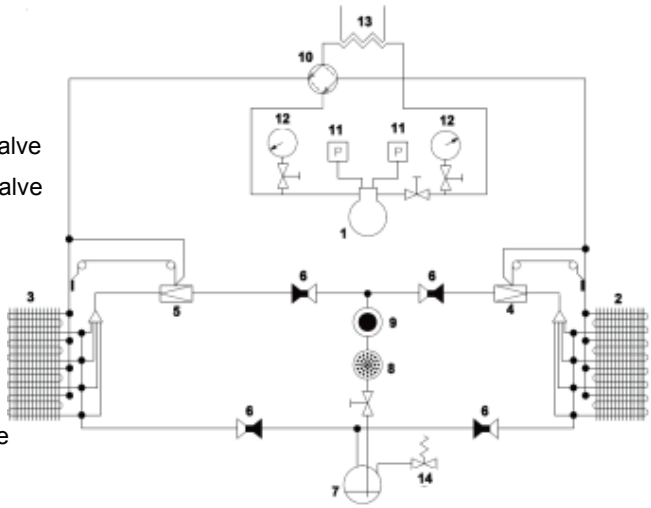

4.4.2.1 Accessories

The following accessories can be delivered for the XWPRS heat pump:

- By pass damper for cross flow heat exchanger
- Water trap
- Inspection windows and lights
- Service switch compressor
- Water cooled condenser (see chapter 4.4.3)

4.4.3 Water cooled condenser

As an option the heat pump in a DanX swimming pool plant can be fitted with a water-cooled condenser, so that any surplus heat, which cannot be used for heating up the supply air, can be transferred to the pool or sanitary water. The drawing below shows how a water cooled condenser can be connected to the swimming pools water supply and DanX unit. The DanX control need an On/Off signal from the water temperature sensor if heating is needed or not and it sends a 230V signal to run the pump for the WCC.

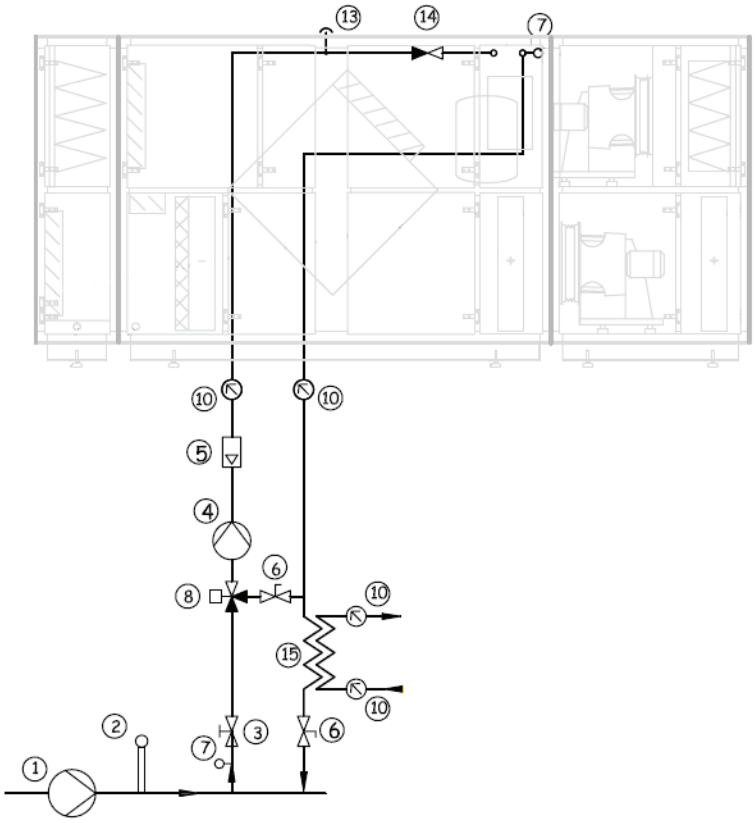

1. Main pump for pool water
2. Temperature sensor pool water
3. Manual shut down valve
4. Pump for water cooled condenser (Controlled by DanX el panel)
5. Water consumption gauge
6. Regulation valve
7. Temperature sensor (On/Off signal to DanX el panel)
8. 3 way valve
10. Temperature gauge
13. Air realise valve
14. Non return valve
15. Separate heat exchanger for pre heating sanitary water

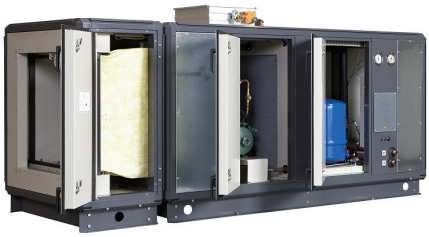

4.4.4 DanX AF

In the DanX AF the cooling circuit is used only for air dehumidification. In daytime it is possible to add up to 30% fresh air through a separate fresh air damper for hygienically reasons. It is important that the air volumes selected for the AF modules, are within +/- 10% of the value stated in the technical data table, otherwise dehumidification capacity will be reduced.

The dehumidifier consists of one or two separate cooling circuits with on compressor each. The condenser and evaporator coil are manufactured from copper tubing with pre painted aluminium fins housed within an aluminium frame and epoxy painted after assembly and therefore especially suitable for the aggressive swimming pool environment. Furthermore the cooling circuit is equipped with all necessary components like high/low pressure stats and gauges, dry filter and so on. The compressor is an energy efficient compressor with R407c as refrigerant. The cooling circuit is designed without the facility for defrosting, as the units are solely for use in swimming pools. Therefore the temperature of the air to be dehumidified must be between 22°C and 36°C.

1. Compressor
2. Evaporator
3. Condenser
4. Expansion valve
5. Receiver
6. Dry filter
7. Sight glass
8. HP / LP gauge
9. LP stat
10. HP stat
11. Safety valve
12. WC condenser
13. Magnetic valve

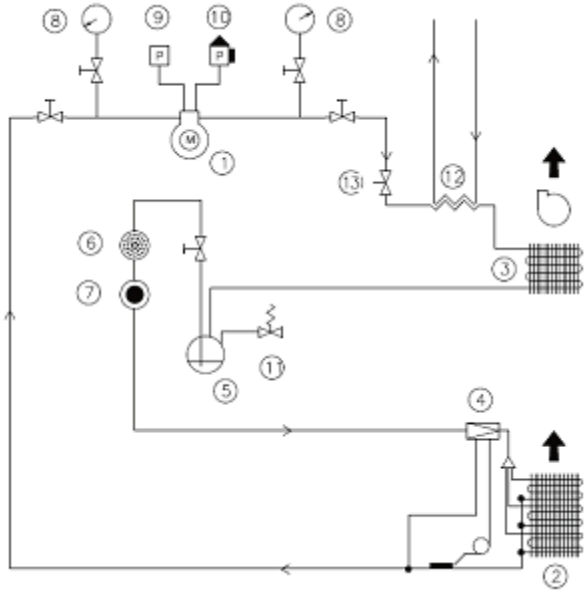

4.4.3.1 Accessories

The following accessories can be delivered for the AF heat pump:

- 30% fresh air damper
- Water trap
- Inspection windows and lights
- Service switch compressor
- Water cooled condenser (see chapter 4.4.2.2)

4.5 Heat coils

4.5.1 LPHW Coils

LPHW heating coils with a variety of capacities can be supplied for mounting into the DanX swimming pool units. The coils are manufactured from copper tubing with aluminium fins housed within a galvanised steel frame. The maximum working pressure is 16 bar at a maximum water temperature of 120°C. For exact technical data of the coils, or other temperatures and parameters, please contact Dantherm.

4.5.1.1 Accessories

The following accessories can be delivered for the LPHW heating coil:

- Manual or automatic frost thermostat
- 2 or 3 way valves with actuator

4.5.2 Electrical Heating Coils

The electrical heating coils are built in into an alu-zinc coated metal frame and designed for a minimum air speed of 1.5 m/s and a maximum outlet temperature of 40°C. The protection class is IP 43. There are two options, with or without built in capacity control. All coils are equipped with Limit and OT safety thermostats.

When ordered with built in capacity control only a 0-10V control signal from the DanX control panel is needed. The capacity of the coil is then controlled steeples by the internal control system. Please note that the running current for the heating coil, which can be single or three phases depending on the capacity, has to be connected separately to the heating coil and will not come from the DanX control panel. The maximum coil size is 135 kW for 3x400V and 75 kW for 3x230V.

If a higher capacity is needed the coil will be delivered without capacity control. The heating capacity for these coils can be split up in different stages and different output proportions. For this type of coil a special DanX control panel is needed.

4.5.2.1 Accessories

The following accessories can be delivered for the electric heating coil:

- Protection class IP 55

4.6 Filters

The filters for all DanX units comprise of standard filter cassettes making filter replacement easy and delivery times from any filter manufacturer as short as possible. All bag and compact filters are of a synthetic type and placed in rails which are equipped with a handle to facilitate sealing and replacement. Panel filters are using U rails for fixing. For more exact technical data of the filters, especially the pressure drop, please use the selection program.

4.6.1 Accessories

The following accessories can be delivered for filters:

- Filter guard
- Differential pressure manometer

4.7 Dampers

All dampers fulfil air tightness class 4 according to EN 1886 with aluminium frame and blades. The blades are fitted with rubber seals offering a high level of air tightness, with stainless steel spindle and bearings of a composite material.

4.7.1 Mixing box dampers

The mixing box dampers are standard equipment in the DanX XWPS / XWPRS and XKS units. In the DanX XWPS the three mixing box dampers are built into the same module as the heat pump and cross flow heat exchanger. In the DanX XWPRS the three mixing box dampers are built into a separate module. In the DanX XKS the mixing box dampers are placed above the cross flow heat exchanger one over the exhaust side and one over the supply side.

4.7.2 Recirculation damper

The recirculation damper is placed above the by-pass duct of the cross flow heat exchanger return side to regulate the amount of exhaust air over the evaporator coil.

4.7.3 By-pass damper

In the DanX XWPS / XWPRS the cross flow heat exchanger can be equipped as an option with a by-pass damper, which can be used for capacity control and free cooling. In the DanX XKS the by-pass damper is a part of the mixing box and therefore standard.

4.8 Damper motors

For operation of the individual multi-leaf dampers special designed motorised 24V actuators are available. These modulating actuators are specially designed for aggressive environment like swimming pools and have protection class IP 66. The normal temperature range for these damper motors is -30˚C to +50˚C. All actuators motors are factory fitted to the damper.

5.0 CONTROL SYSTEM

A complete DanX ventilation system for swimming pools requires a control system that corresponds to the actual unit configuration in the most energy efficient way as possible. Dantherm offer various options depending on the unit configuration, which are individually tested before delivery and therefore are giving the most reliable and energy efficient operation possible. The electronic control system with contactors, main switch and function switch etc. is built into a separate control cabinet, normally mounted near the ventilation unit. A special execution for outdoor installation is available as option.

5.1.1 Internal unit wiring

The DanX unit is supplied ready wired and with all necessary sensors and safety devices installed. All control current components such as temperature sensors, damper motors, solenoid valves, motor valves etc. are connected to a terminal in the heat exchanger section. It is thus a simple matter to mount any subsequent control device. All mains current components such as motors, frequency converters and compressors are connected to a terminal on the operating side of each module. This ensures a complete and reliable unit in which only the electrical connection between the control panel and the unit remains to be made.

5.1.2 Connection between control panel and ventilation unit

To make it as easy as possible to establish the electrical connection between the control panel and the unit, the unit can be delivered with pre-mounted cables. These cables are permanently attached to the individual parts of the DanX unit and at their other end merely need to be plugged into the control panel. Normally one cable per motor and compressor is needed plus a cable for the unit's total control current. By means of the cable the electrical connection between the control panel and the unit can be made in just a few minutes. The cable is available in any required length. If a traditional connection between the control panel and the unit is desired, DanX and the control panel are available with ordinary terminal connections.

5.2 DanX XWPS / XWPRS and XKS control functions

The control system is based on a Honeywell MVC controller, programmed by Dantherm to perform control strategies and functions in the most energy efficient way. The MVC controller is mounted in the front door of the electrical panel. It has a clear LCD display with messages all important service conditions, such as temperatures, air volume, multi-leaf damper settings etc. Function keys allow easy and logic pre-programming of all operating situations.

5.2.1.1 Fan control plug fans with frequency converter

The plug fans frequency converter is controlled directly by the MVC controller. The wanted air volumes for high and low speed are set in the controller in m^3/h. The actually air volume is then measured through the pressure transmitters which are sending a signal to the MVC controller. Here the actual and wanted air volume is compared and if necessary regulated through lowering or raising the actual motor frequency. Depending on the situation the humidity and temperature control can overrule the fan speed set point and force the fans to start up or run on full speed.

5.2.1.2 Fan control belt driven centrifugal fans

Centrifugal fans are normally equipped with two speed motors, which are controlled through the timer program of the MVC controller by setting the fan speed to high, low or stop. Depending on the situation the humidity and temperature control can overrule the fan speed set point and force the fans to start up or run on full speed.

5.2.2 Humidity control

The humidity in the swimming pool is controlled by the heat pump together with the mixing box. The wanted humidity is set in the MVC controller, together with the minimum percentage of outdoor air entering the pool hall through the mixing box in day time. The heat pump normally has the first priority, which means it will start first if there is a demand to dehumidify. Only if the temperature in the pool hall is too high the heat pump is not started to avoid overheating. If more dehumidification is needed the mixing box outdoor air set point will be overruled and slowly more dry outdoor air will enter the swimming pool hall. When the set humidity is maintained, the mixing box will slowly go back into the minimum position and the heat pump will stop.

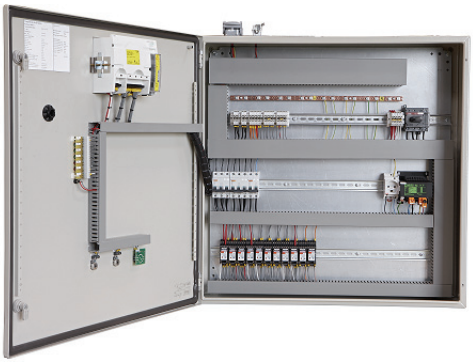

In case of the mixing box being 100% open, the heat pump will stop, as none of the dehumidified air will return to the pool hall.

With the DanX XKS system the humidity in the swimming pool is controlled only by the mixing box. The wanted humidity is set in the MVC controller, together with the minimum percentage of outdoor air entering the pool hall through the mixing box in day time. If there is a demand to dehumidify the minimum mixing box outdoor air set point will be overruled and slowly more dry outdoor air will enter the swimming pool hall. When the set humidity is maintained, the mixing box will slowly go back into the min position.

At high outdoor temperatures (>23°C) an outdoor temperature compensation of the humidity set point will start. The set point will automatically be raised by 1% for each °C higher outdoor temperature until 28°C. After that temperature the humidity set point will not be changed any more. This means the maximum humidity set point compensation will be +5% r.h.

For the control of the humidity we are recommending always a duct sensor. Only if the unit is stopped in night time a wall mounted humidity sensor is needed so it is possible to start up the unit when the humidity level is too high.

5.2.3 Temperature control (heating)

The temperature in the swimming pool hall is controlled by the heat pump (XWPS/XWPRS) together with the heating coil. The wanted room temperature and the minimum / maximum supply air temperature are set in the MVC controller.

The heat pump (XWPS/XWPRS) has the first priority, which means it will start first if there is a demand to heat up. If this is not enough the after heating coil will start up. The heating coil is controlled by a 0-10V signal for the valve actuator and a 230V signal for the hot water pump. When the set room temperature is maintained, the heating coil will slowly stop heating and the heat pump will stop. In case of that the mixing box is closed (normally night time), the heat pump (XWPS/XWPRS) will not start, as no energy can be recovered from the exhaust air and the heating is only done by the heating coil.

With the DanX XKS system the temperature in the swimming pool is controlled only by the heating coil.

For the control of the temperature we are recommending always a duct sensor. Only if the unit is stopped in night time a wall mounted temperature sensor is needed so it is possible to start up the unit when the temperature level is too low.

5.2.4 Temperature control (free cooling)

If the temperature in the swimming pool hall is above the set point and the outside air below the actual room temperature, the mixing box setting will be overruled and up to 100% of outdoor air will enter the swimming pool. If this is not enough the by-pass over the cross flow heat exchanger will open, to bring outdoor air directly into the swimming pool hall (free cooling).

5.2.5 Temperature control (active cooling)

In the XWPRS system, a 4-way valve will switch the heat pump to cooling, if the pool hall temperature gets too high.
On all other units you can option for a water or DX coiling coil. For the DX coil it will be a volt free digital signal, whereas for the water cooling coil you will get a 0-10V signal for the valve actuator and a 230V signal for the water pump.

5.2.6 Evaporator de icing

To avoid icing on the evaporator of the heat pump at cold outdoor temperatures, a passive (compressor stop) de-icing function is built in to the control system.

5.2.7 Water cooled condenser

If there is no demand for heating or dehumidification of the pool hall air, the heat pump (XWPS/XWPRS) will normally be stopped. If a water cooled condenser is built in into the heat pump circuit we can transfer the energy of the exhaust air still to the pool or for example shower water. The MVC controller needs an external signal (digital) from the water supply if water heating is needed. If this is the case the MVC controller will start up the heat pump and give a 230V signal to the WCC pump to start circulating water through the water cooled condenser.

5.2.8 Alarms

The following alarms can be seen on the MVC controller:

- Fan motor alarm (centrifugal fan), which will stop the ventilation plant totally. The signal will come either from the thermo relay, or flow gauge.
- Fan motor alarm (plug fan), which will stop the ventilation plant totally. The signal will come from the frequency converter.
- Frost alarm LPHW heating coil, which will stop the ventilation plant totally and open the 3 way valve actuator fully.
- OT alarm from the overheating sensor of the electric heating coil, which will stop the ventilation plant totally.
- HP/LP pressure alarm from the heat pump, which will stop the heat pump, but not the fans.
- Fire alarm, which will stop the ventilation plant totally.
- Filter alarm, which will not stop the unit.

If one of these alarms appears a common fault signal will automatically be sent to a volt free contact where a building alarm can be connected.

.

5.3 DanX AF control functions with MVC 80 *

The control system is based on a Honeywell MVC controller, programmed by Dantherm to perform control strategies and functions in the most energy efficient way. The MVC controller is mounted in the front door of the electrical panel. It has a clear LCD display with messages all important service conditions, such as temperatures, air volume, multi-leaf damper settings etc. Function keys allow easy and logic pre-programming of all operating situations.

* See chapter 5.4 for a simple electromechanically AF control panel

5.3.1.1 Fan control plug fan with frequency converter

The plug fan frequency converter is controlled directly by the MVC controller. The wanted air volumes for high and low speed are set in the controller in m^3/h. The actually air volume is then measured through the pressure transmitter which is sending a signal to the MVC controller. Here the actual and wanted air volume is compared and if necessary regulated through lowering or raising the actual motor frequency. Depending on the situation the humidity and temperature control can overrule the fan speed set point and force the fan to start up or run on full speed.

5.3.1.2 Fan control belt driven centrifugal fan

The centrifugal fan is normally equipped with two speed motors, which is controlled through the timer program of the MVC controller by setting the fan speed to high, low or stop. Depending on the situation the humidity and temperature control can overrule the fan speed set point and force the fan to start up or run on full speed.

5.3.2 Humidity control

The humidity in the swimming pool is controlled by the heat pump. The wanted set point is set in the MVC controller which will start or stop the compressor of the heat pump, depending on the humidity.

5.3.3 Temperature control (heating)

The temperature in the swimming pool hall is controlled by the heating coil. The wanted room temperature and the minimum / maximum supply air temperature are set in the MVC controller. The heating coil is controlled by a 0-10V signal for the valve actuator and a 230V signal for the hot water pump.

5.3.4 Outdoor air damper / exhaust fan control

If the AF is equipped with an outdoor damper this will be opened/closed through the time program of the MVC 80 controller, depending on if the pool is open or closed. At the same time a volt free signal is given to an external exhaust fan to start when the outdoor damper is open.

5.3.5 Temperature control (active cooling)

With the DanX AF controller it is possible to control a water cooling coil, where you will get a 0-10V signal for the valve actuator and a 230V signal for the water pump.

As a special option it is possible to get an MVC controller for a DanX AF with external condenser. In the case of cooling the controller will switch between the internal and external condenser depending on if there is a cooling demand or not.

5.3.6 Water cooled condenser

If a water cooled condenser is built in into the heat pump circuit energy can either be transferred to the supply air or to the pool water. The MVC controller needs an external signal (digital) from the water supply if water heating is needed. If this is the case the MVC controller will give a 230V signal to the WCC pump to start circulating water through the water cooled condenser.

5.3.7 Alarm output

The following alarms can be seen on the MVC controller:

- Fan motor alarm (centrifugal fan), which will stop the ventilation plant totally. The signal will come either from the thermo relay, or flow gauge.
- Fan motor alarm (plug fan), which will stop the ventilation plant totally. The signal will come from the frequency converter.
- Frost alarm LPHW heating coil, which will stop the ventilation plant totally and open the 3 way valve actuator fully.
- OT alarm from the overheating sensor of the electric heating coil, which will stop the ventilation plant totally.
- HP/LP pressure alarm from the heat pump, which will stop the heat pump, but not the fan.
- Fire alarm, which will stop the ventilation plant totally.
- Filter alarm, which will not stop the unit.

5.4 DanX AF with simple electromechanical controls

Beside the MVC 80 controls for DanX AF there is also the possibility of using a basic electromechanical panel, with all the necessary safety functions for the fan and heat pump system.

5.4.1 Fan control

This system basic AF system can only be used with centrifugal fan, either with one or two speed motors. As there is no timer program in this panel the wanted fan speed has to be set by a switch. If the switch is set on ½ speed to fan speed will automatically go over to full speed when dehumidification is needed and the compressor is running.

5.4.2 Humidity control

The wanted humidity is set directly at the dial of the digital hygrostat. If the humidity is above the set point the compressor will start dehumidifying, is the humidity below the set point the compressor is stopped.

5.4.3 Temperature control (heating)

The heating coil of the AF will be controlled by a temperature module where the wanted room temperature is set and the heating valve controlled by a 0-10V output.

5.5 Communication

There are different possibilities for communication between the DanX unit and a BMS system, depending on if a MVC 80 or MCV Web has been chosen as a controller for the unit.

5.5.1 Communication with MVC 80

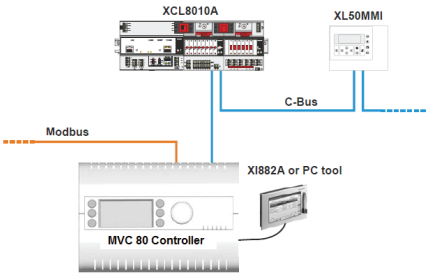

The MVC 80 controller is normally operated via the standard function keys and the LCD display. Beside that the following possibilities are available to operate the controller remotely or through a BMS system.

5.5.1.1 PC tool XL Online (MVC 80)

XL Online is a PC tool to service the MVC 80 controller. With this tool it is possible to upload new programs, edit time programs and set points, viewing data points, make tend logging and viewing alarms. The PC tool is available for free from our FTP server. A special USB/RS232 cable to connect the MVC 80 to a laptop can be purchased from Dantherm.

5.5.1.2 Operator interface touch screen (MVC 80)

The XI882A operator interface is an easy-to-operate and robust operator unit for the MVC 80 plant controller. The touch-panel operation screens allow for easy and self-explanatory operation by finger-tip or by touch-pen. User-configurable fast-access lists can contain selected data points, time programs, and parameters, thus permitting plant oriented and customer-oriented operation. The XI882 can be connected to the MVC 80 using a special USB / RS 232 cable. Graphic trending of data points is supported.

Alternatively a MVC WEB controller with a separate touchscreen / PC can be used which will also have the possibility of a graphic display of the plant, which is not possible with the XI882A operator interface (see chapter 5.5.2).

5.5.1.3 Honeywell C-Bus (MVC 80)

The Honeywell C-Bus allows integrating the MVC 80 controller directly into a Honeywell Excel 5000 system. In C-Bus all data points of the controller are readable and all set points readable and writable.

5.5.1.4 Modbus RTU (MVC 80)

The MVC 80 can work as a Modbus RTU slave and it is possible to read or read / write the following data points. When Modbus RTU is ordered there will follow a complete list of addresses and integration instructions with each unit.

Data point	Data type	Message type
Temperature open mode	uint 16	Read/write
Temperature closed mode	uint 16	Read/write
Humidity open mode	uint 16	Read/write
Humidity closed mode	uint 16	Read/write
Min outdoor air	uint 16	Read/write
Min supply temperature	uint 16	Read/write
Max supply temperature	uint 16	Read/write
Return air volume low	uint 16	Read/write
Return air volume high	uint 16	Read/write
Supply air volume low	uint 16	Read/write
Supply air volume high	uint 16	Read/write
Room temperature	uint 16	Read
Supply temperature	uint 16	Read
Outdoor temperature	uint 16	Read
Evaporator temperature	uint 16	Read
Room humidity	uint 16	Read
Return air volume	uint 16	Read
Supply air volume	uint 16	Read
Outdoor damper	uint 16	Read
Exhaust damper	uint 16	Read
Mix damper	uint 16	Read
Recirculation damper	uint 16	Read
Heating signal	uint 16	Read
Cooling signal	uint 16	Read
Unit status	uint 16	Read
Program status	uint 16	Read
Common Fault	bool	Read
Fan alarm	bool	Read
Filter alarm	bool	Read
Fire alarm	bool	Read
Heating coil alarm	bool	Read
Compressor overload	bool	Read
HP/LP alarm	bool	Read
Return fan start	bool	Read
Supply fan start	bool	Read
Pump heating coil	bool	Read
Pump WCC	bool	Read
Pump cooling coil	bool	Read
DX cooling	bool	Read
Compressor	bool	Read
External Stop	bool	Read

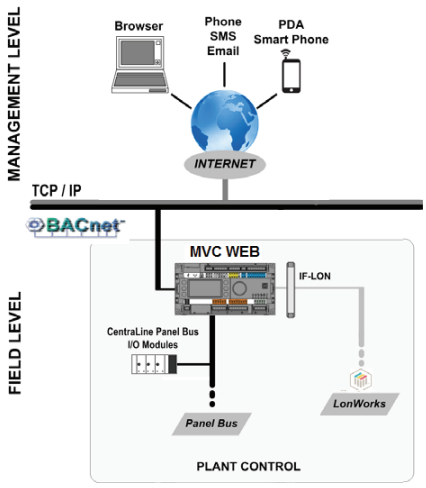

5.5.2 Communication with MVC WEB

The MVC Web controller is normally operated via a standard internet browser like Internet Explorer, Mozilla Firefox or Goggle Chrome. By default, an integrated web-server provides all operation pages for a full browser-based operation. Through the consequent use of software standards, any PC platform can be used as an operator interface (client), including laptops, desktops PCs, or touch screen PCs for direct flush mounting into electrical panel doors. At the same time simple mail transfer protocol (SMTP) is used for e-mail alarming via network and internet DSL connections.

Alternatively it is also possible to operate the controller via the standard function keys and the LCD display, or the following communication protocols.

5.5.2.1 Bacnet MSTP or IP (MVC WEB)

All time programs, data points and set points of the program can communicate directly with other Bacnet controllers which are based on the international Bacnet protocol.

5.5.2.2 LON Talk (MVC WEB)

If you wish to communicate via LON, please contact Dantherm as at the moment there is no standard solution for this Bus system.

dantherm.com

ELECTRONICS COOLING DEHUMIDIFICATION **VENTILATION** MOBILE HEATING AND COOLING

Dantherm is a market-leading supplier of energy-efficient climate control solutions for customers across the globe. Our subsidiaries in Norway, Sweden, Germany, the UK, the US and China and our representative office in Russia unite approx. 600 employees. We operate in the following four main business areas:

Electronics cooling:
Climate control for electronics and battery cooling in radio base stations and other Telecom infrastructure. Telecom customers include network suppliers and network operators.

Dehumidification:
Mobile and stationary dehumidifiers for drying buildings and for use in private pools and wellness centres.

Ventilation:
Large ventilation systems used in swimming pools and buildings such as shopping centres and cinemas requiring frequent air change. The range also includes domestic ventilation products based on high-performance heat exchangers.

Mobile heating and cooling:
Products for heating or cooling of tents and equipment used by the armed forces and aid organisations. The customers are primarily the armed forces in NATO countries as well as tent and container manufacturers.

Dantherm Air Handling A/S
Marienlystvej 65
DK-7800 Skive, Denmark
Tel. +45 96 14 37 00
Fax +45 96 14 38 20
info@dantherm.com

ISO 9001 BUREAU VERITAS Certification

ISO 14001 BUREAU VERITAS Certification

Dantherm®
CONTROL YOUR CLIMATE

08.13. Thorvig Tryk, Skive